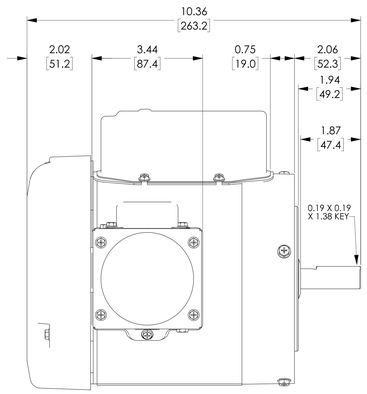

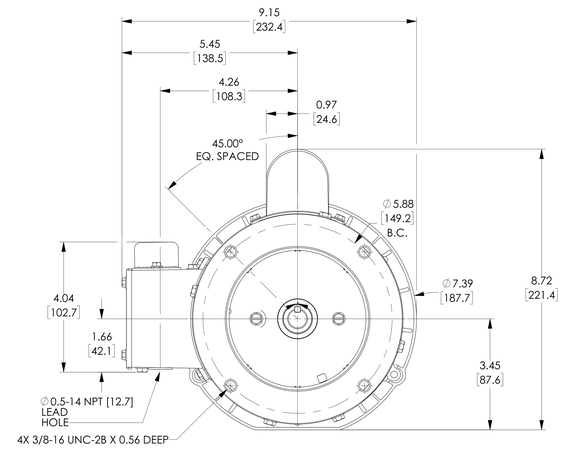

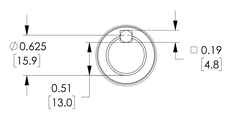

DETAIL A
SCALE 2 : 1

114311.00

Units: inches [mm]
Scale: Full

LEESON WASHGUARD WHITE DUCK SERIES STANDARD EFFICIENCY AC INDUCTION MOTOR, WASHDOWN & INVERTER RATED, 0.33HP, 1-PH, 1800 RPM, 115/208-230 VAC, 56C FRAME, TEFC

AUTOMATIONDIRECT.com

NOTES:

1. DIMENSIONS CAN BE CHANGED BY MANUFACTURER WITHOUT NOTICE.
2. DIMENSIONS DO NOT IMPLY TOLERANCE.