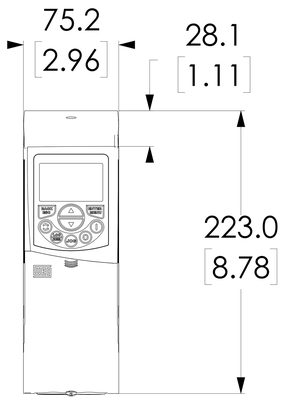

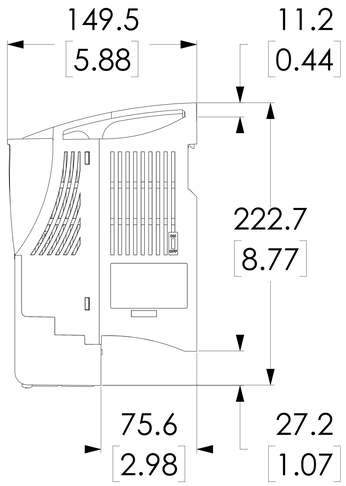

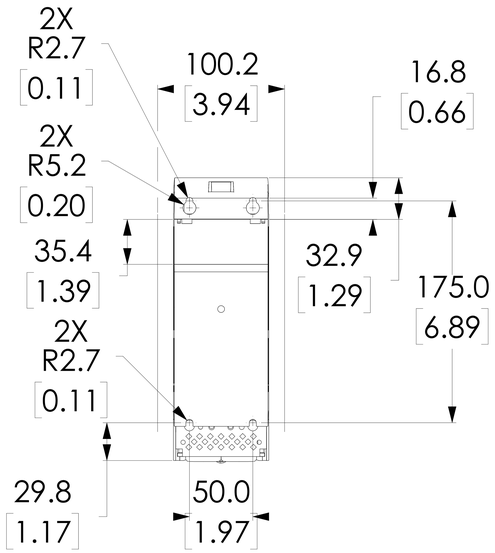

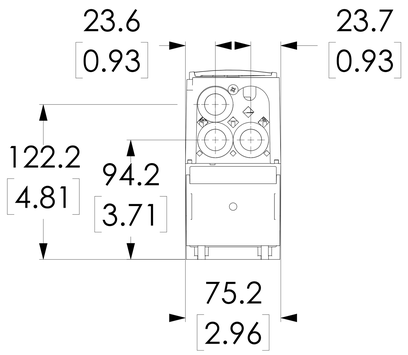

NOTES:

1. DIMENSIONS CAN BE CHANGED BY MANUFACTURER WITHOUT NOTICE.
2. DIMENSIONS DO NOT IMPLY TOLERANCE.

11527460

Units: mm [inches]
Scale: Full

WEG ELECTRIC CFW500 SERIES CONDUIT BOX, NEMA 1, FOR USE WITH WEG CFW500 SERIES A FRAME AC DRIVES, MOUNTING HARWARE INCLUDED

AUTOMATIONDIRECT.com