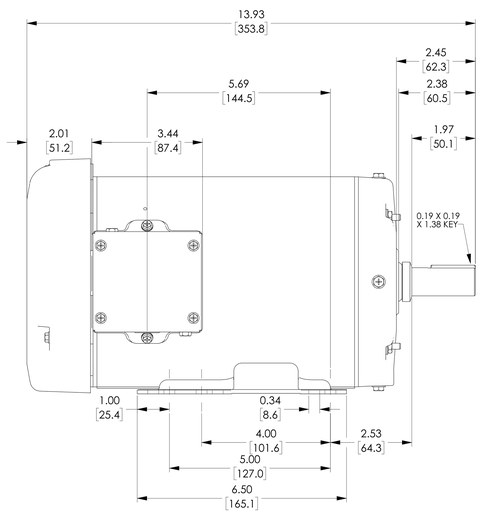

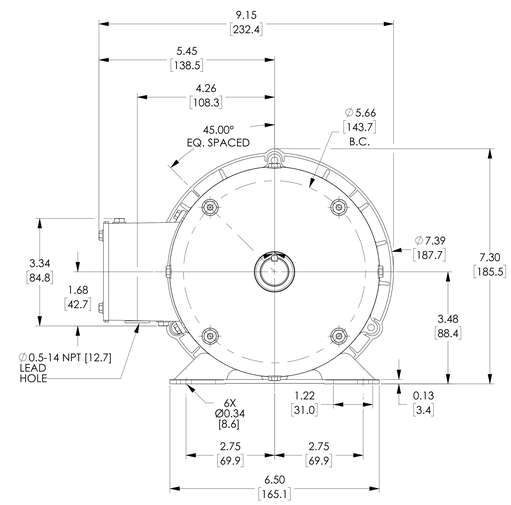

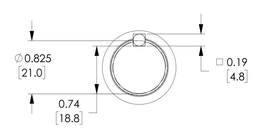

DETAIL A
SCALE 2 : 1

NOTES:

1. DIMENSIONS CAN BE CHANGED BY MANUFACTURER WITHOUT NOTICE.
2. DIMENSIONS DO NOT IMPLY TOLERANCE.

121866.00

Units: inches [mm]
Scale: Full

LEESON WASHGUARD WHITE DUCK SERIES PREMIUM EFFICIENCY AC INDUCTION MOTOR, WASHDOWN & INVERTER RATED, 2HP, 3-PH, 1800 RPM, 208-230/460 VAC, 145T FRAME, TEFC

AUTOMATIONDIRECT.com