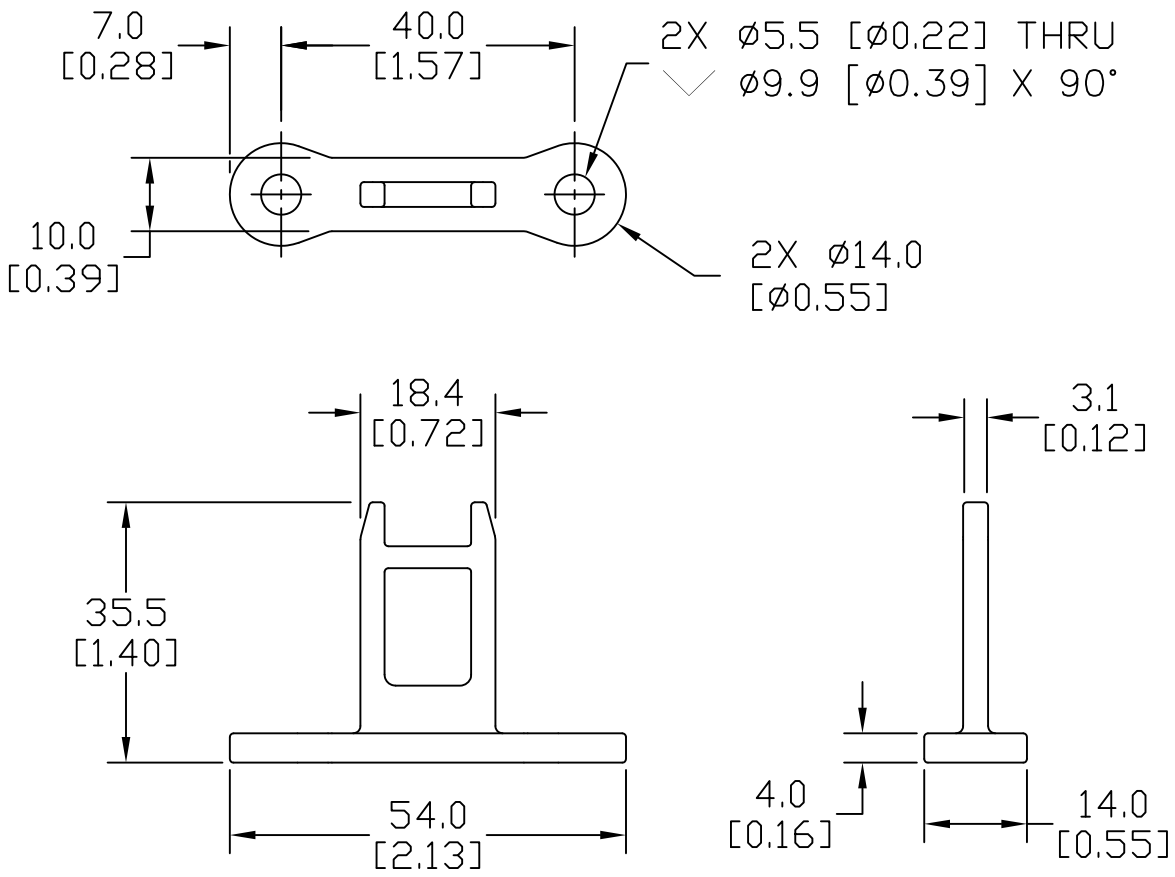

140106
Units: mm [inches]
Scale: Full
ACTUATOR TONGUE, 90-DEGREE MOUNTING, FOR KP & K-15 SAFETY SW, PLASTIC HEAD
AUTOMATIONDIRECT.com