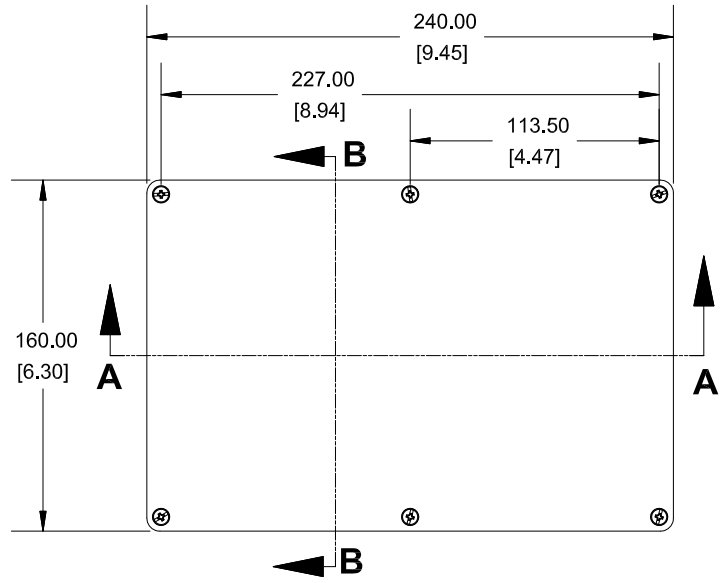

TOP VIEW

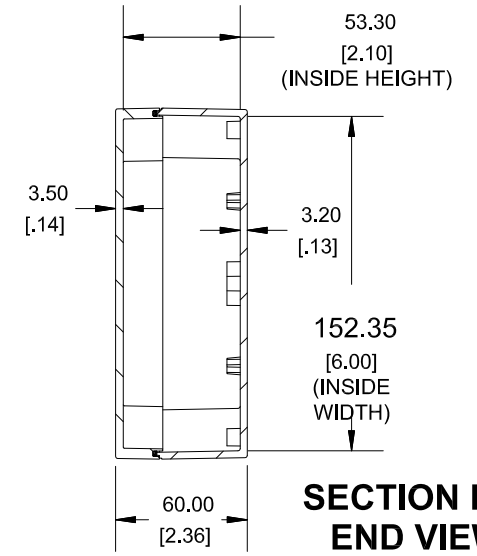

SECTION B-B
END VIEW

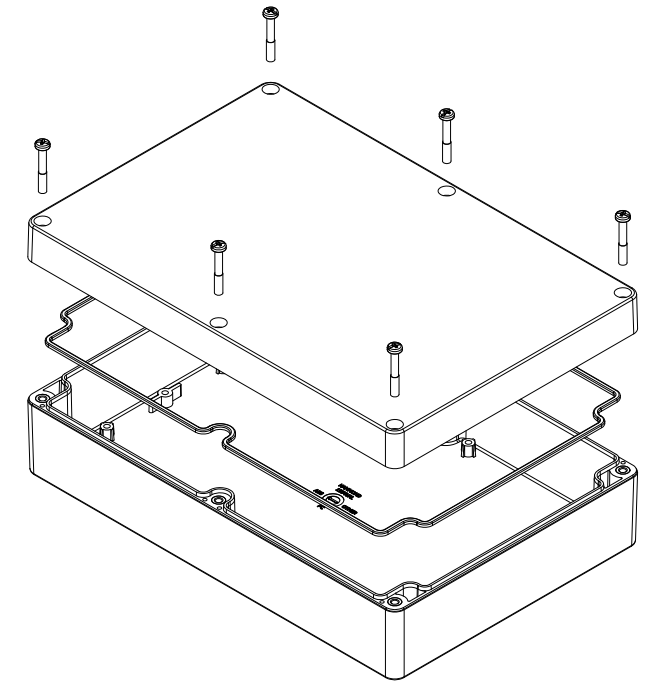

POLYCARBONATE
VERSION ONLY
c UL US LISTED
FILE #E65324
TYPE 4,4X,6,6P

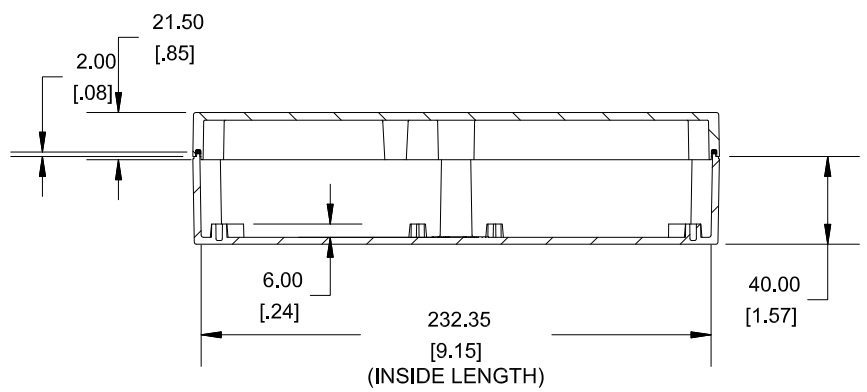

SECTION A-A
SIDE VIEW

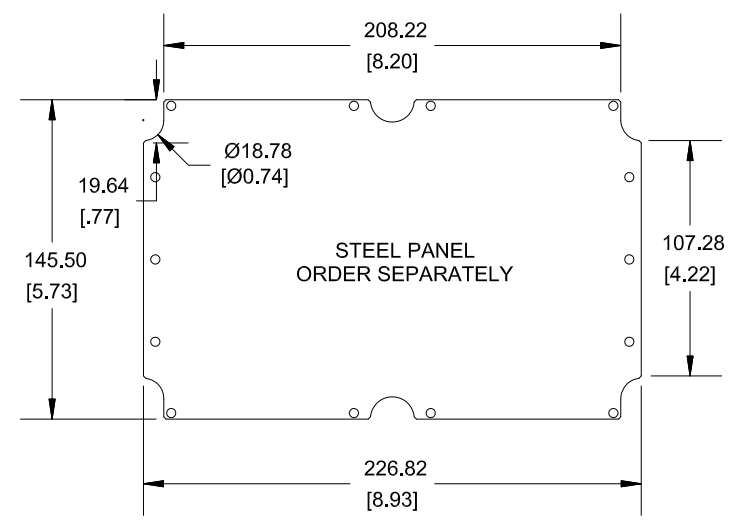

Solid models of this enclosure available in .stp or .x_t
(Part number and text placement/orientation on our products are subject to change,
we do not recommend using them as a locating reference for modification purposes)

NOTE
Purchased assembly includes box, lid, 6 cover screws, and preformed silicone gasket. General Purpose ABS version is not UL approved. (Matl UL94 - HB) Polycarbonate version is UL 508A approved. (Matl UL94 - 5VA @ 3mm)
Recommended Cover screw torque -- 71-85 ozf-in (50-60 cN-m)

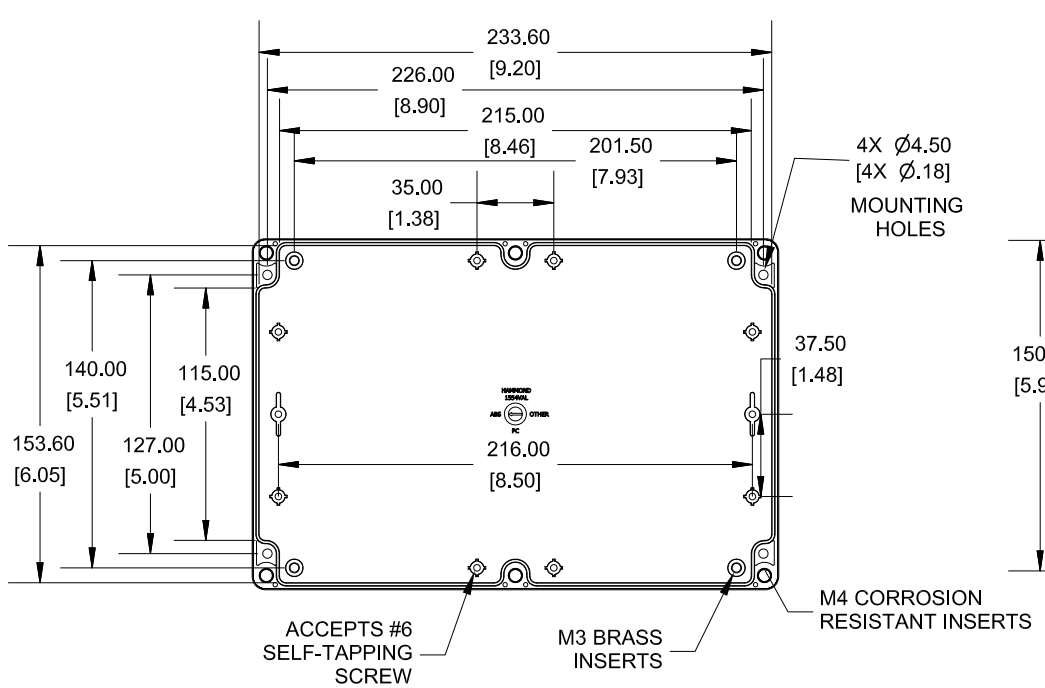

INSIDE BOX

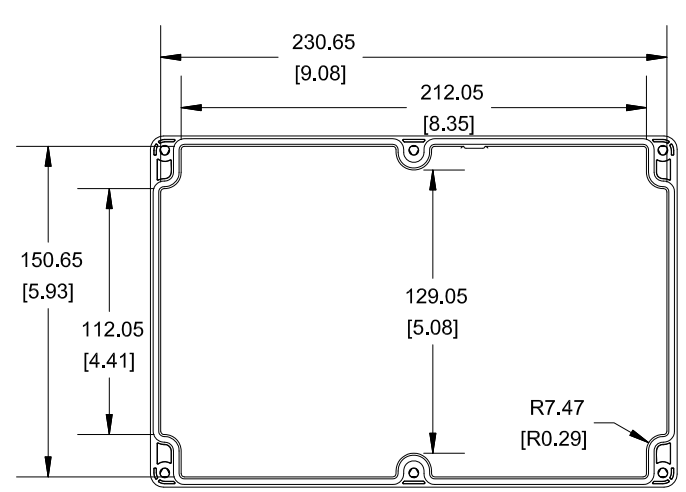

INSIDE LID

1554VAL	
1554VAL Regular Enclosure	
General Purpose ABS RAL-7035	1554VALGY
Polycarbonate RAL-7035	1554VAL2GY
1554VAL Clear / Smoke Lid Enclosure	
Polycarbonate Box / Clear Polycarbonate Lid	1554VAL2GYCL
Polycarbonate Box / Smoke Polycarbonate Lid	1554VAL2GYSL
ACCESSORIES	
Steel Inner Panels	1554VAPL
Steel Panel / P.C. Board Screw [M3-0.5 x 8mm Plated] (Pkg 100)	1591MM100
Steel Panel / P.C. Board Self Tapping Screw [#6 X 1/4" (6.4mm) Plated] (Pkg 100)	1598ATS100
Stainless Steel Cover Screws [M4-0.7 X 25mm] (Pkg 50)	SC583-50
Silicone Pre-formed Gasket Black (Pkg 2)	1554VAGASKET

Dimensions:
mm
[inches]

HAMMOND MANUFACTURING®

1554VAL2GYCL

www.hammondmfg.com

REV:26.06.2020