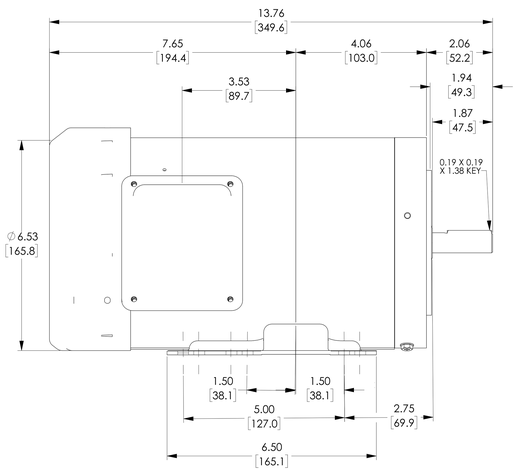


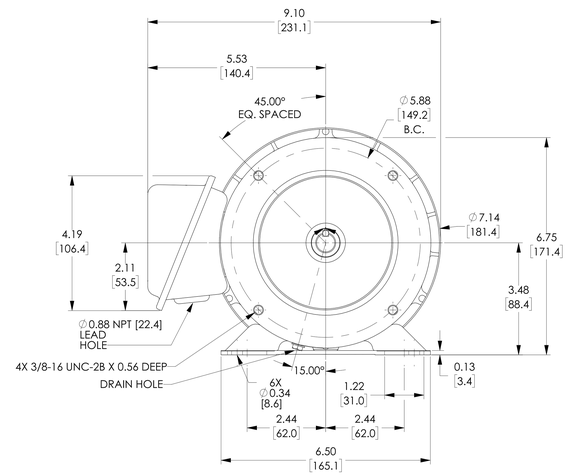


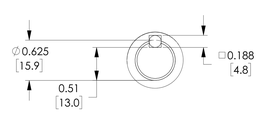


DETAIL A
SCALE 2 : 1

NOTES:

1. DIMENSIONS CAN BE CHANGED BY MANUFACTURER WITHOUT NOTICE.
2. DIMENSIONS DO NOT IMPLY TOLERANCE.

191562.00

Units: inches [mm]
Scale: Full

LEESON WASHGUARD SST DUCK SERIES PREMIUM EFFICIENCY AC INDUCTION MOTOR, WASHDOWN & INVERTER RATED, 2HP, 3-PH, 3600 RPM, 208-230/460 VAC, 56HC FRAME, TEFC

AUTOMATIONDIRECT.com