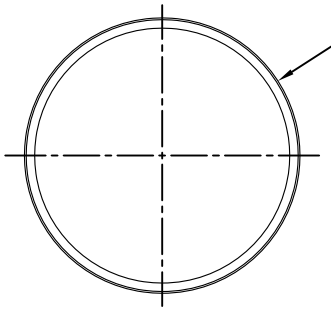

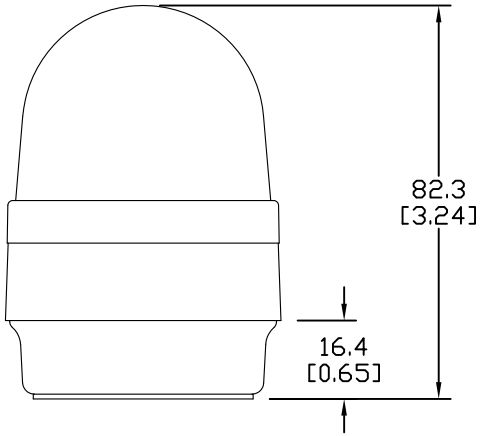

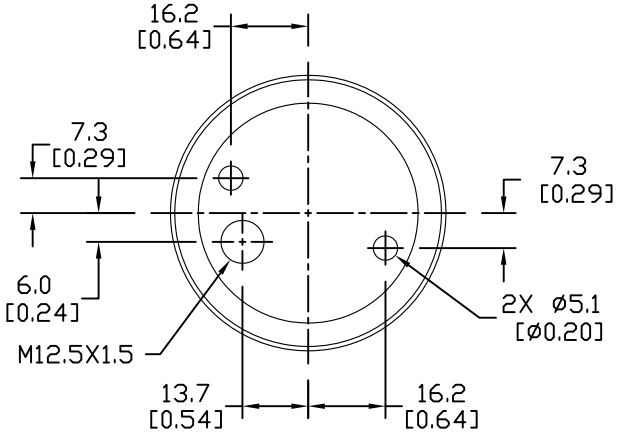

20110067

Units: mm [inch]

Full Scale

BEACON LIGHT,
LED, RED, 115VAC, PERMANENT,
58mm BASE MOUNT

AUTOMATIONDIRECT.com