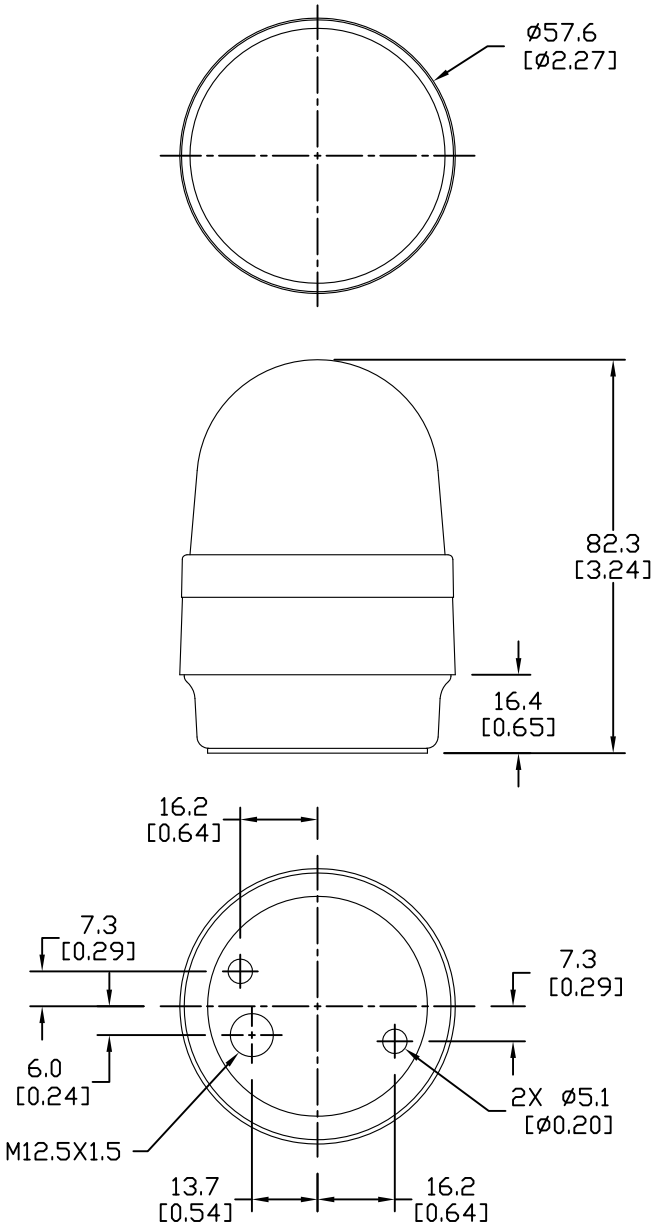

20130067

Units: mm [inch]

Full Scale

BEACON LIGHT,
LED, YELLOW, 115VAC, PERMANENT,
58mm BASE MOUNT

AUTOMATIONDIRECT.com