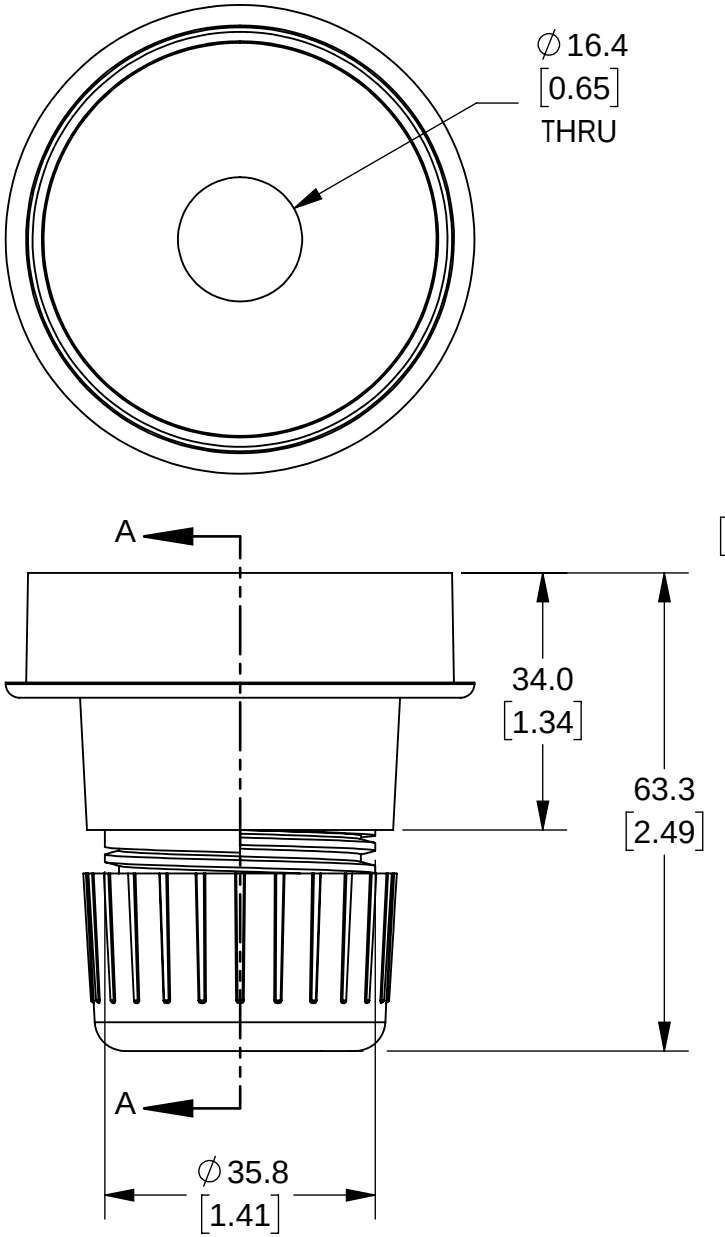

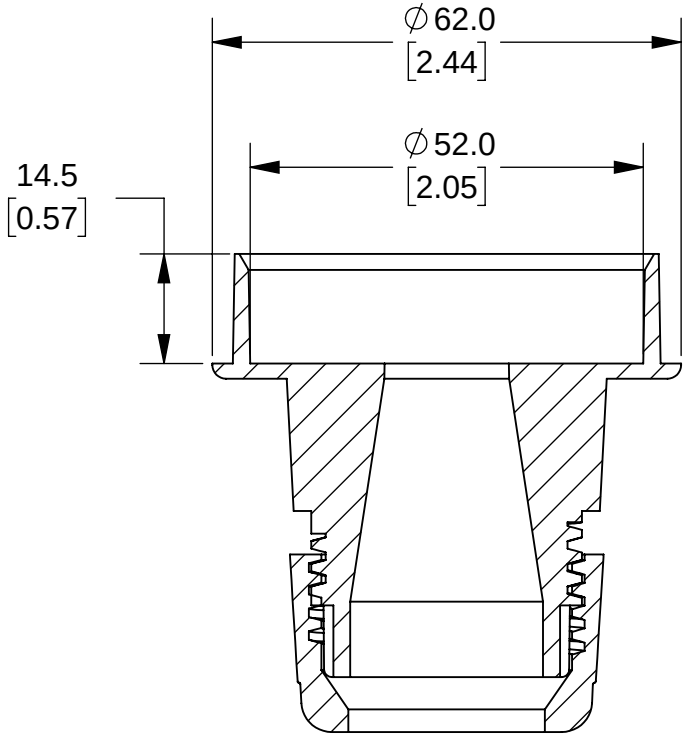

SECTION A-A

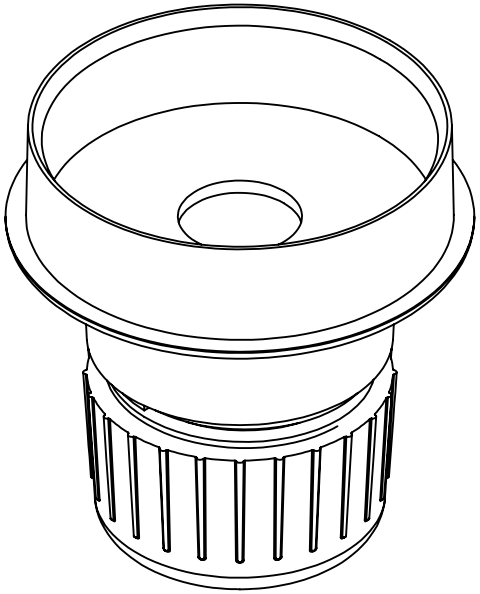

NOTES:

1. DIMENSIONS CAN BE CHANGED BY MANUFACTURER WITHOUT NOTICE.

2. DIMENSIONS DO NOT IMPLY TOLERANCE.

26070005

Units: mm [inch]

Scale: Full

WERMA EVOSIGNAL MINI SERIES TUBE APAPTOR

AUTOMATIONDIRECT.com