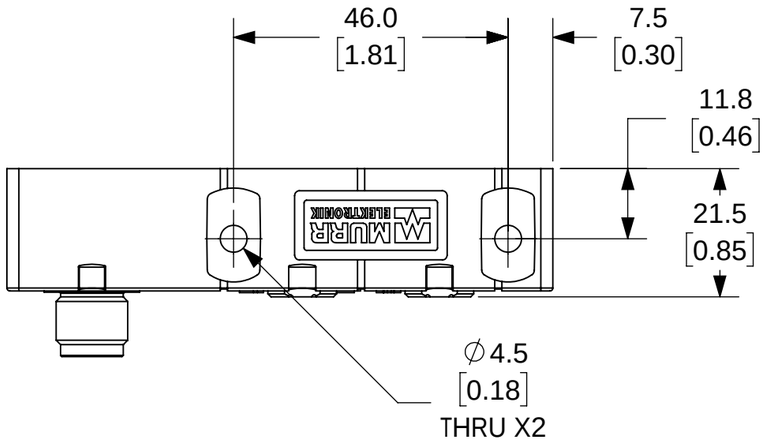

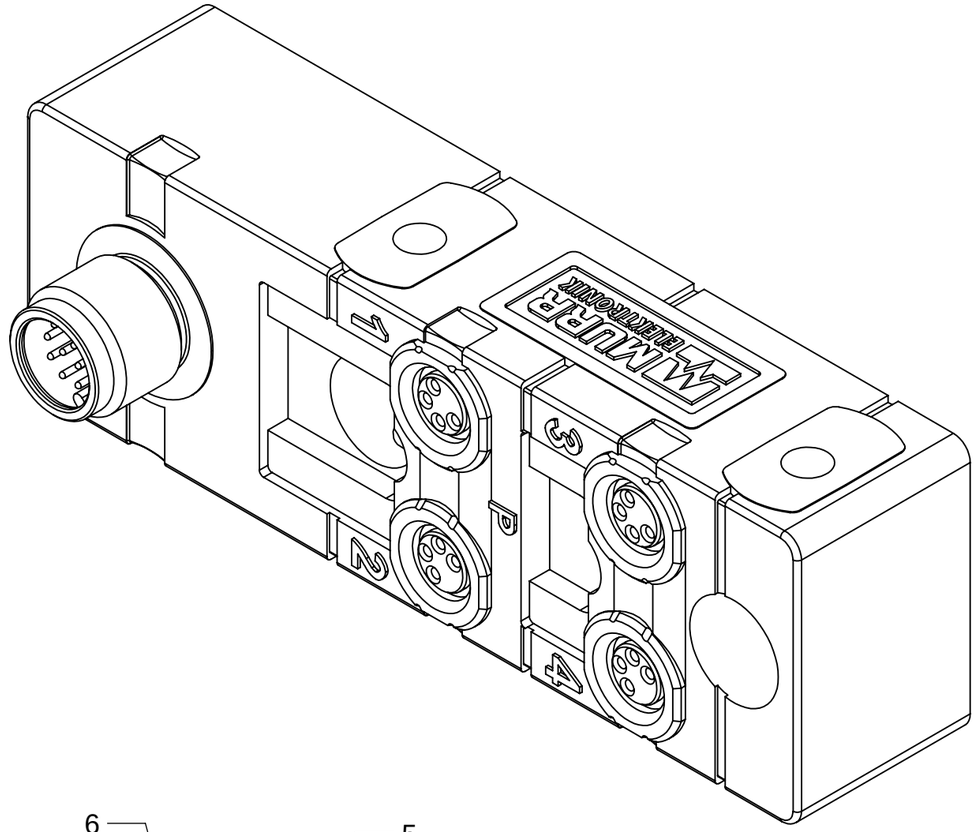

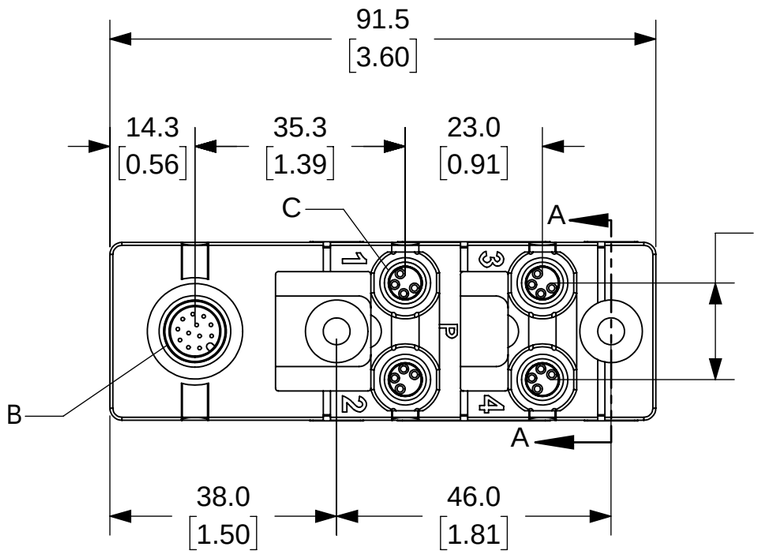

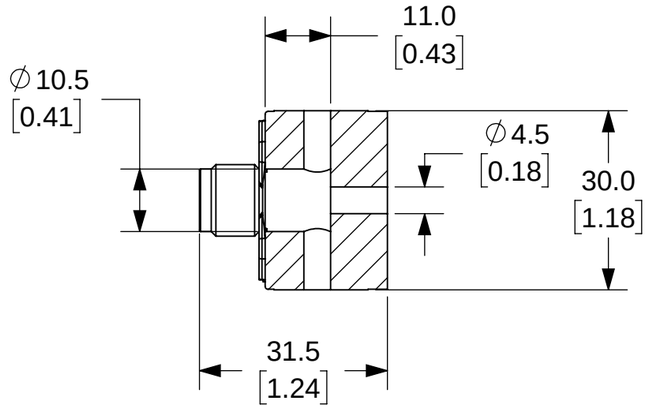

SECTION A-A

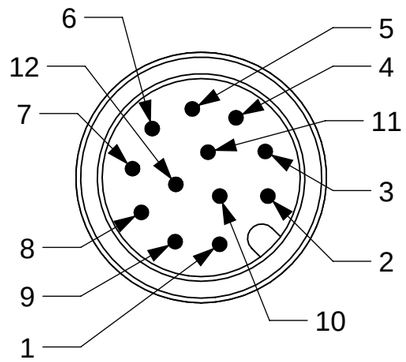

DETAIL B
SCALE 4 : 1
M12 MALE CONTACT

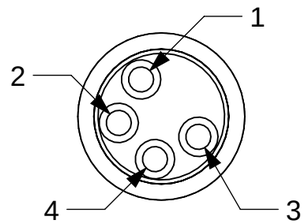

DETAIL C
SCALE 4 : 1
M8 FEMALE CONTACT

NOTES:

1. DIMENSIONS CAN BE CHANGED BY MANUFACTURER WITHOUT NOTICE.
2. DIMENSIONS DO NOT IMPLY TOLERANCE.

8000-84160-0000000

Units: mm [inches]
Scale: Full

EXACT 8 PASSIVE DISTRIBUTION BLOCK: 4 PORTS, 4-PIN M8 SOCKETS

AUTOMATIONDIRECT.com