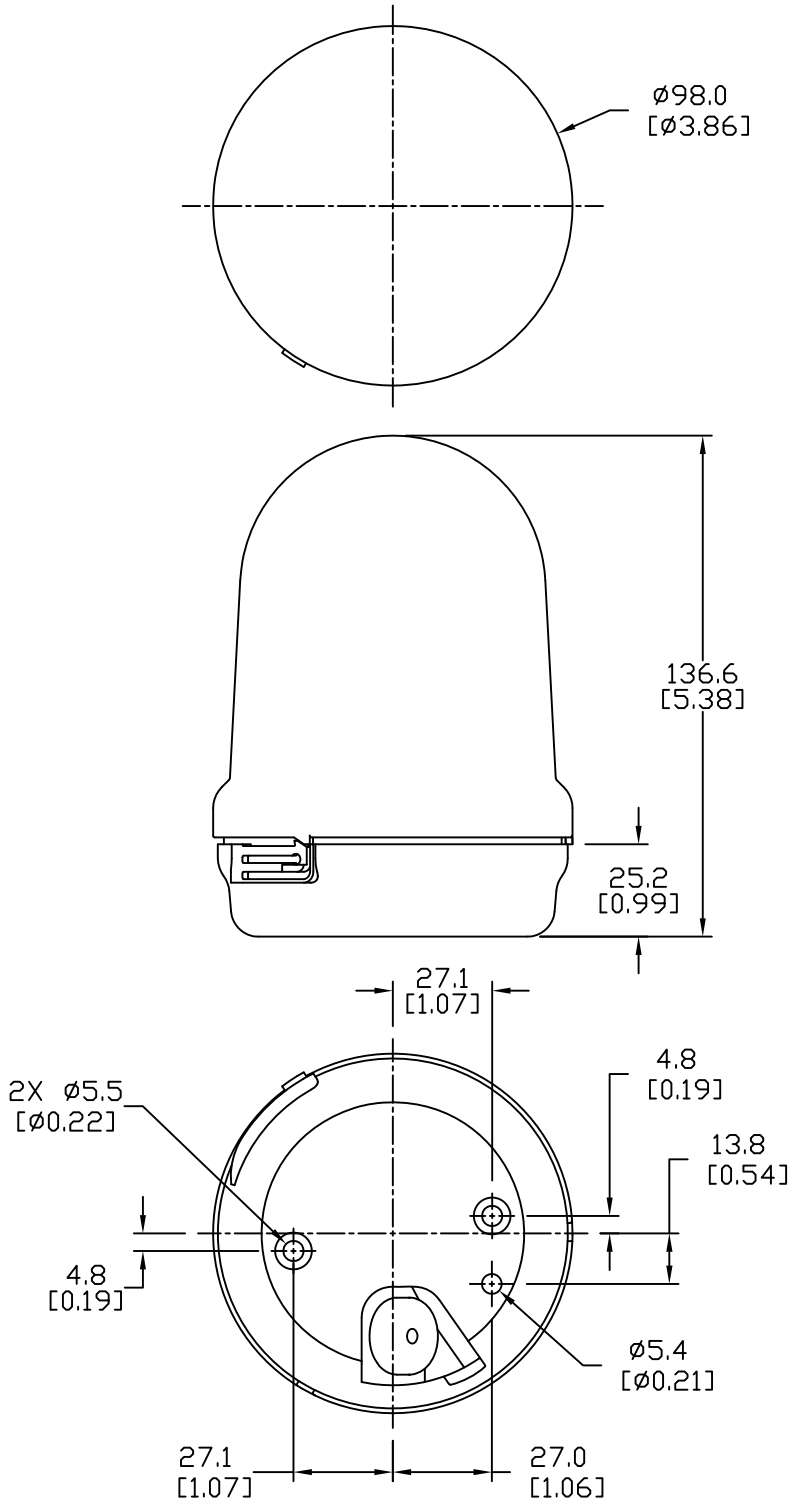

82810055

Units: mm [inches]

Scale: Full

BEACON LIGHT,
XENON, RED, 24VDC,
FLASHING, 100mm BASE MOUNT

AUTOMATIONDIRECT.com