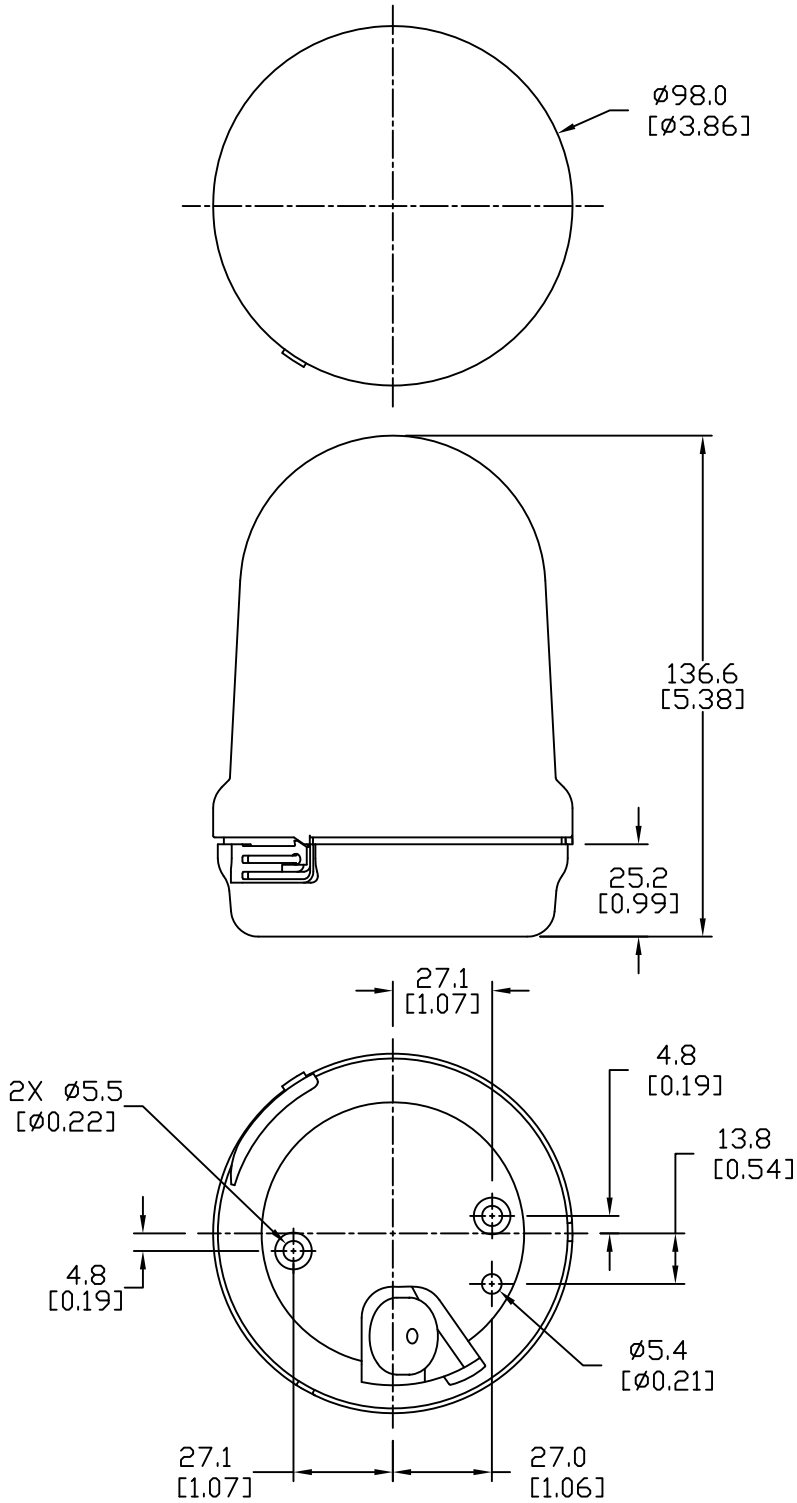

82925055

Units: mm [inches]

Scale: Full

BEACON LIGHT,
LED, GREEN, 24VDC, PERMANENT/
BLINKING/ ROTATING 98mm BASE MOUNT

AUTOMATIONDIRECT.com