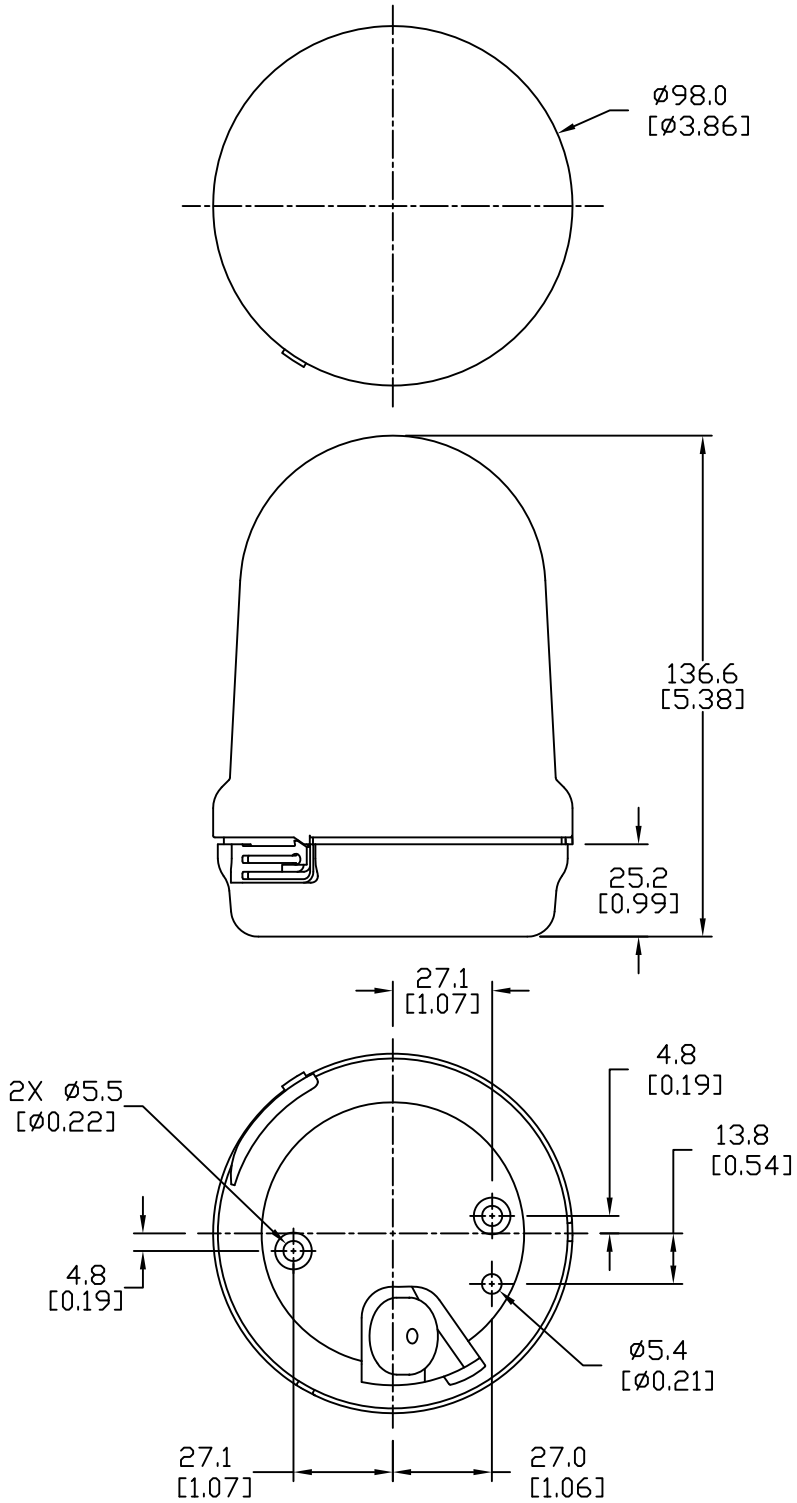

82931055

Units: mm [inches]

Scale: Full

BEACON LIGHT,
LED, YELLOW, 24VDC, ROTATING,
98mm BASE MOUNT

AUTOMATIONDIRECT.com