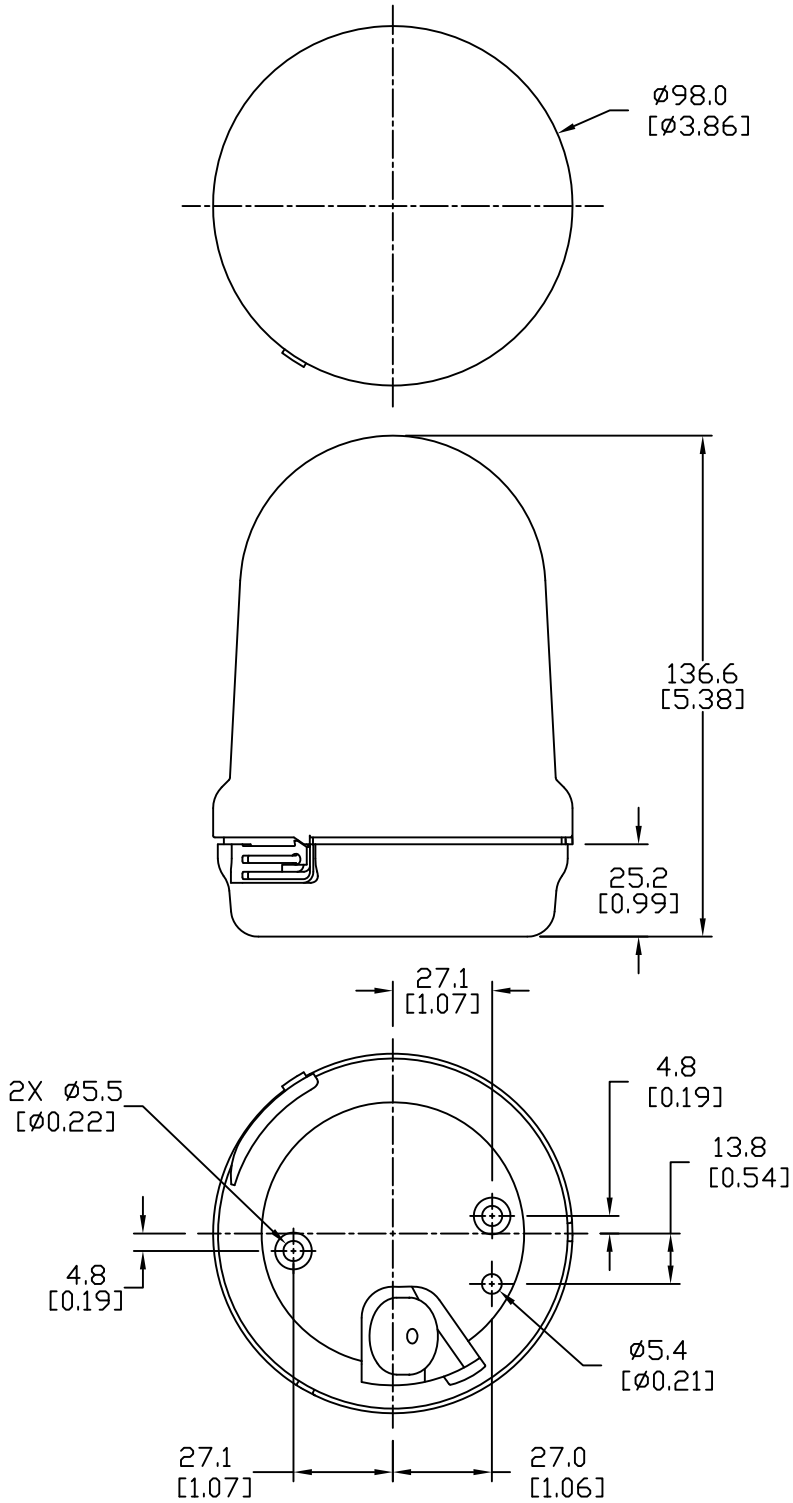

82939068

Units: mm [inches]

Scale: Full

BEACON LIGHT,
LED, YELLOW, 115-230VAC, FLASHING
EVS, 98mm BASE MOUNT

AUTOMATIONDIRECT.com