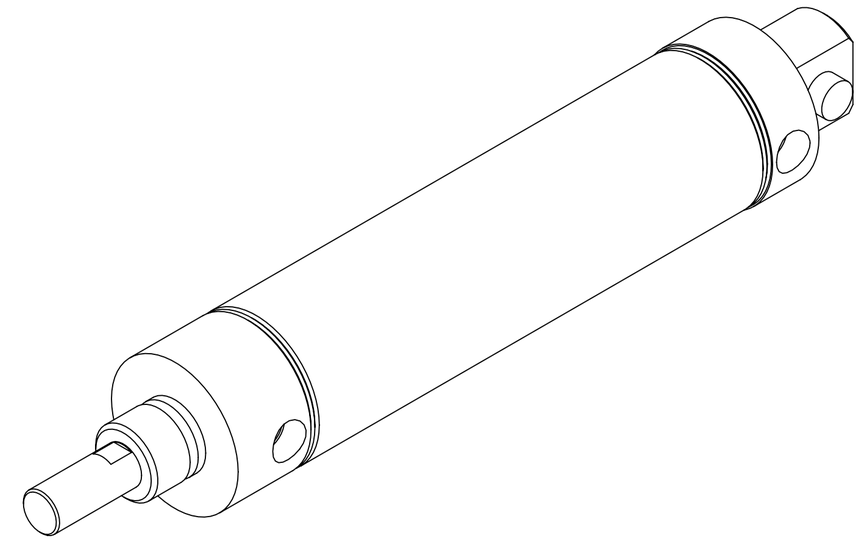

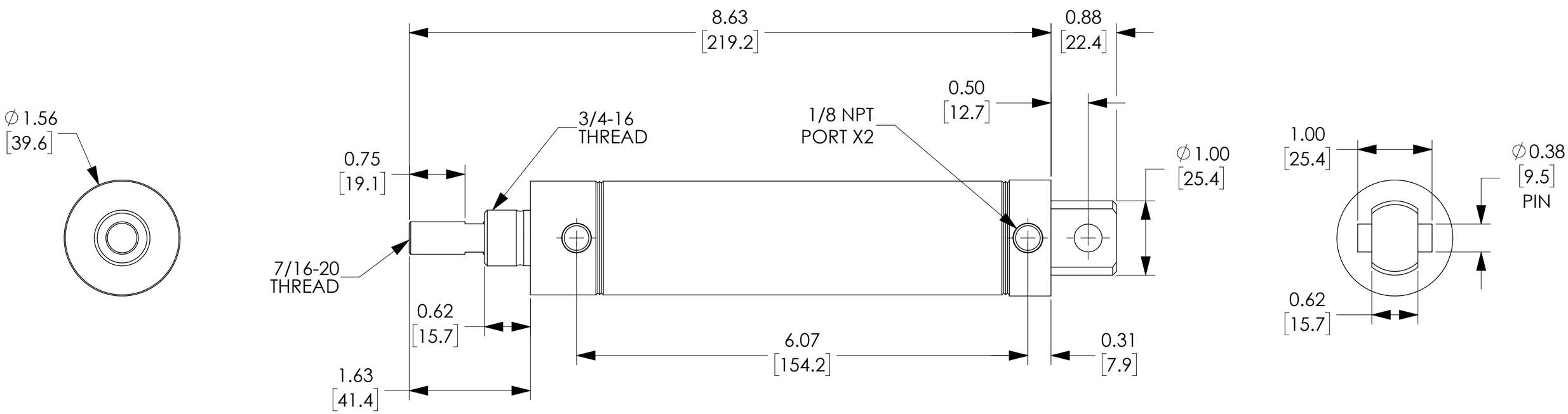

A24040DP-M

Units: inches [mm]
Scale: Full

PNEUMATIC CYLINDER, 1-1/2" BORE, 4" STROKE, DOUBLE ACTING, REAR PIVOT, MAGNETIC PISTON

AUTOMATIONDIRECT.com

NOTES:

1. DIMENSIONS CAN BE CHANGED BY MANUFACTURER WITHOUT NOTICE.
2. DIMENSIONS DO NOT IMPLY TOLERANCE.