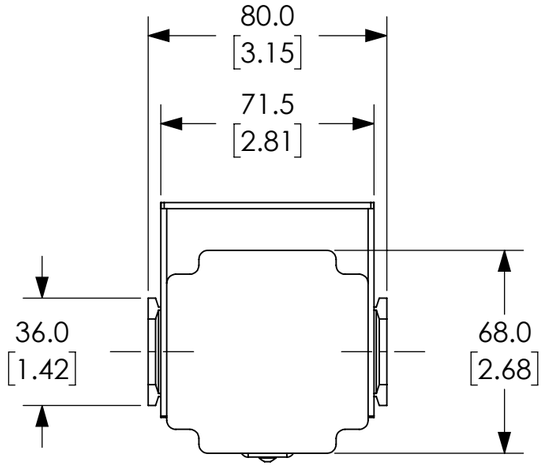

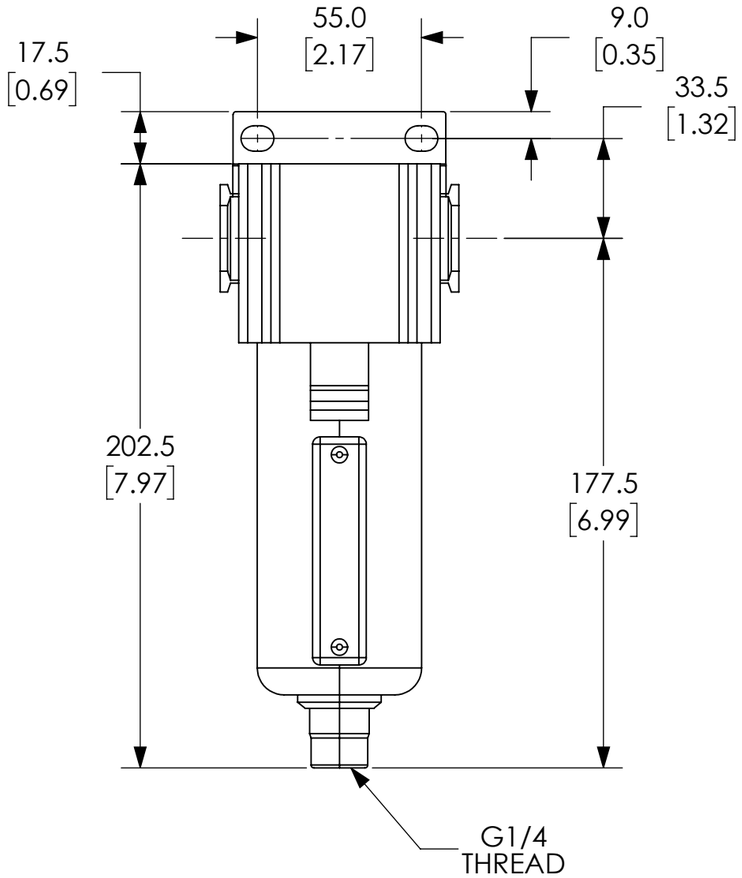

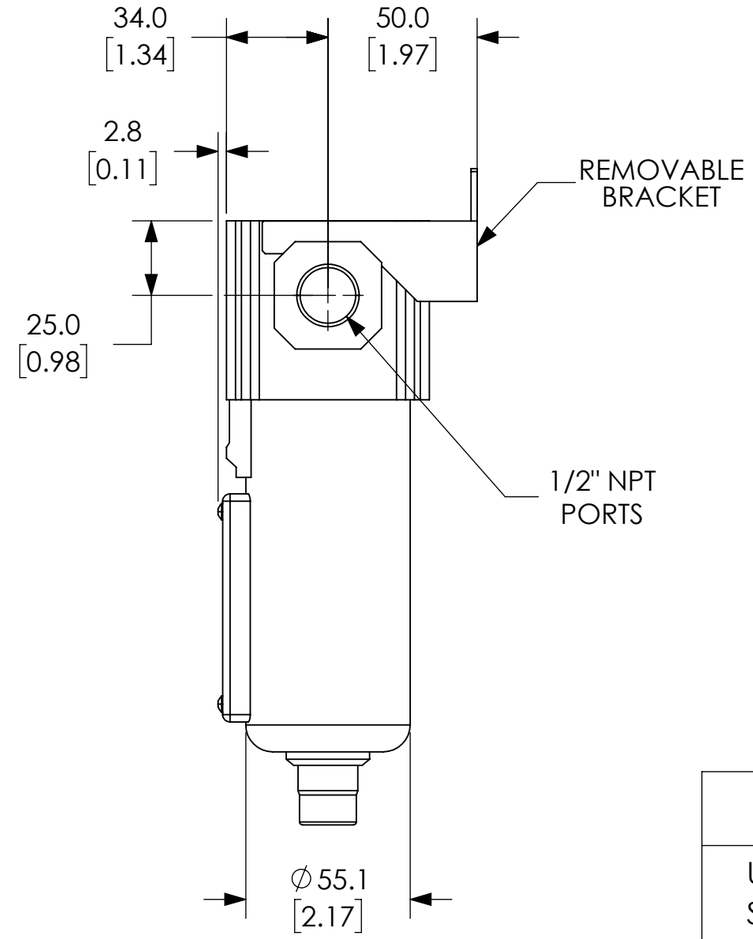

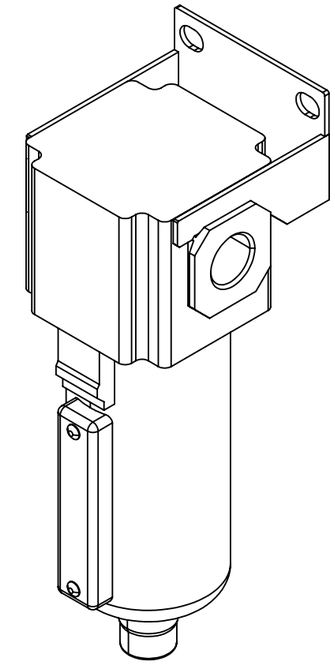

NOTES:

1. DIMENSIONS CAN BE CHANGED BY MANUFACTURER WITHOUT NOTICE.
2. DIMENSIONS DO NOT IMPLY TOLERANCE.

AF2-443-D

Units: mm [inches]
Scale: Full

NITRA FILTER: SEMI AUTO/MANUAL DRAIN, METAL BOWL

AUTOMATIONDIRECT.com