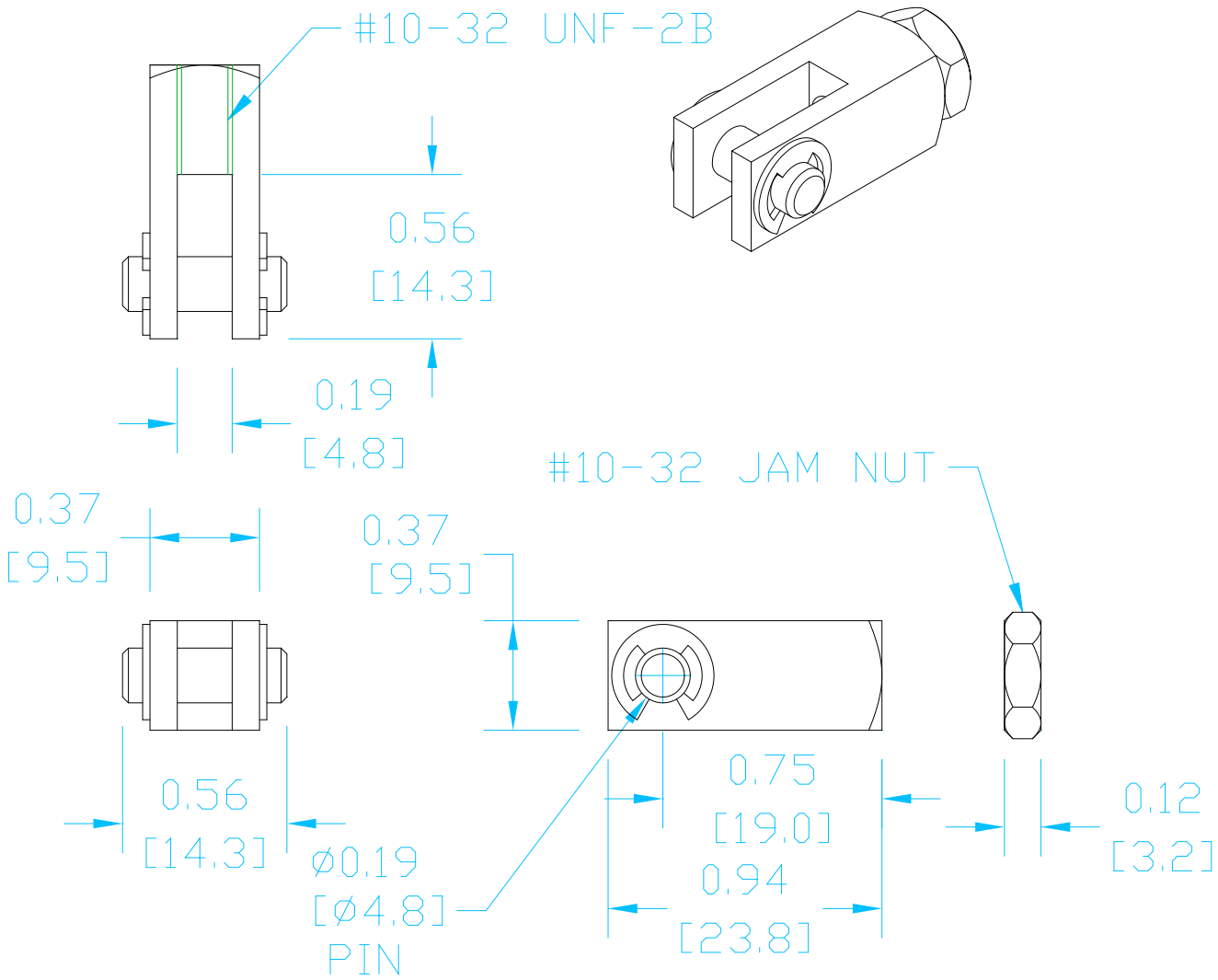

ARC-10-32

Units: inches [mm]
Full Scale
( ) denotes # of similar objects
Ø denotes diameter

AUTOMATIONDIRECT.com