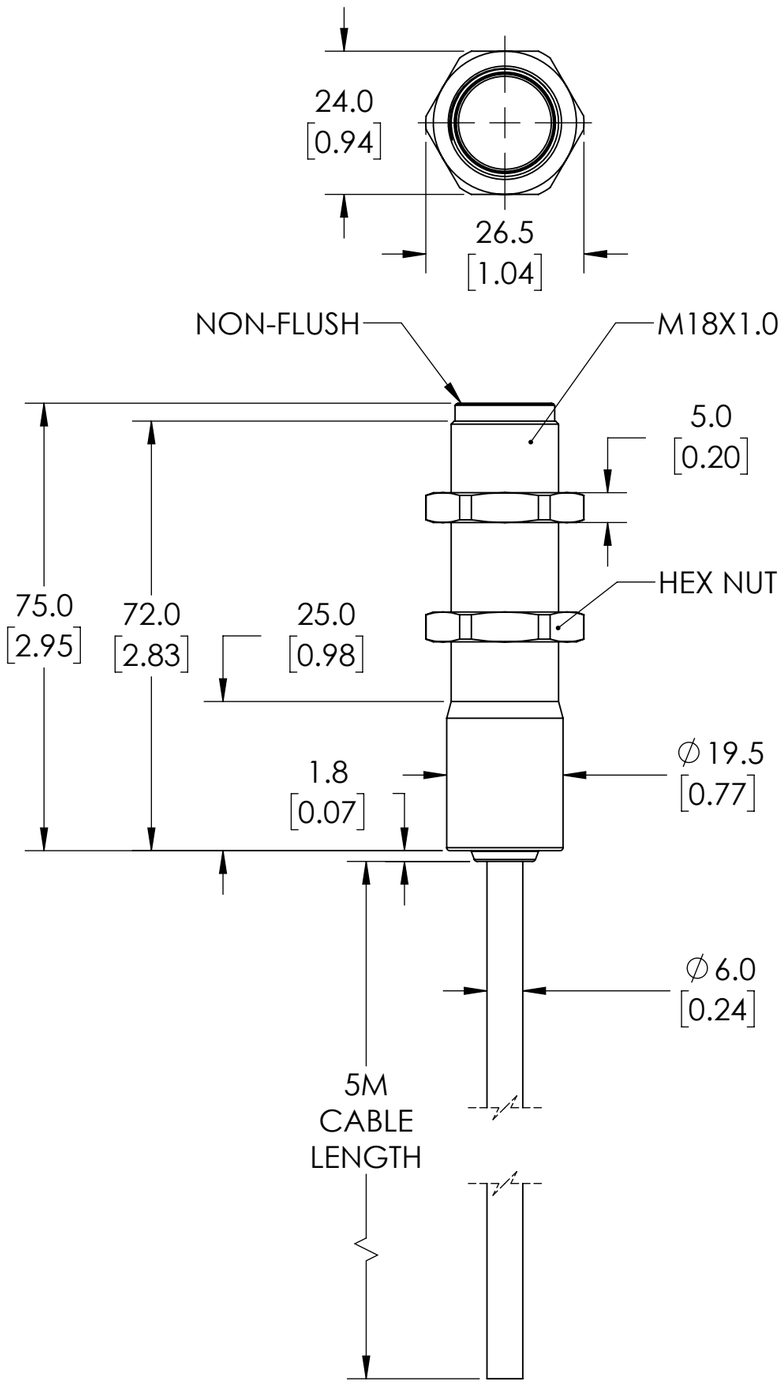

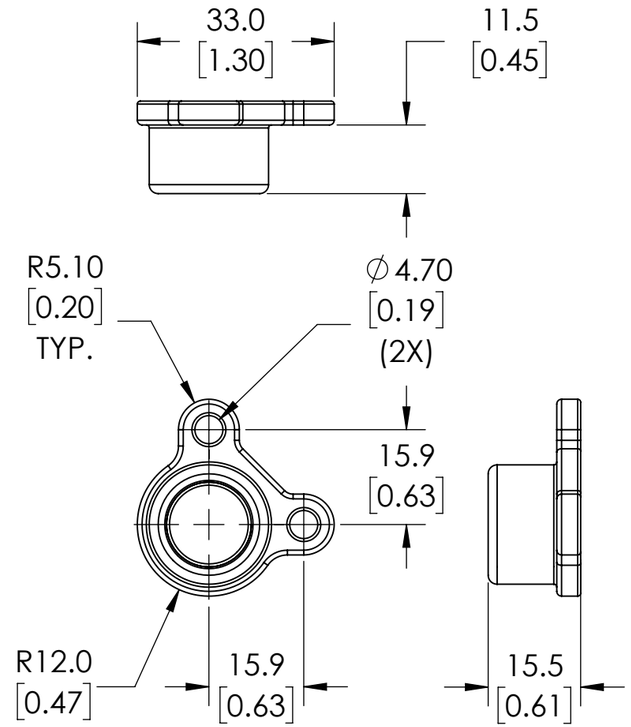

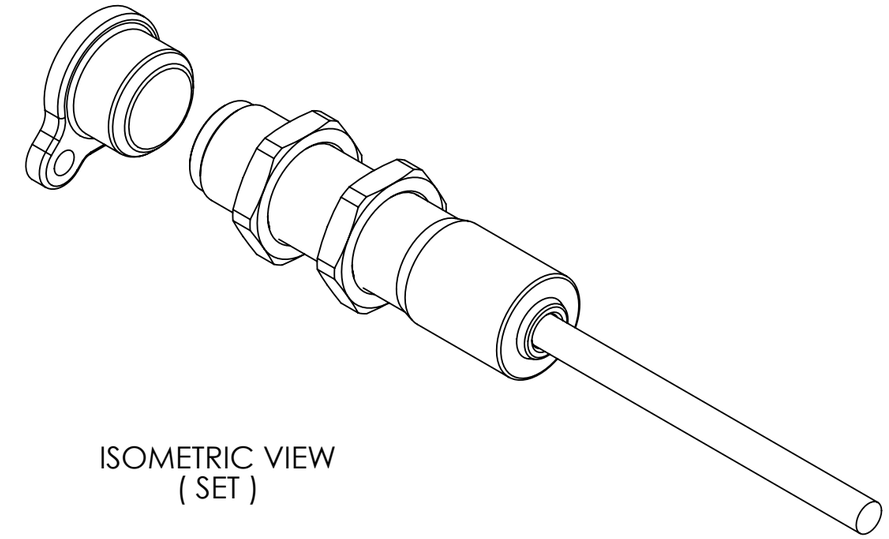

ISOMETRIC VIEW
(SET)

NOTES:

1. DIMENSIONS CAN BE CHANGED BY MANUFACTURER WITHOUT NOTICE.
2. DIMENSIONS DO NOT IMPLY TOLERANCE.

BPR-415014

Units: inches [mm]

Scale: Full

SAFETY SWITCH SET, NON-CONTACT MAGNETIC, (2) N.C. OUT, (1) N.O. OUT, 18MM X 73MM BODY, PIGTAIL, 5M CABLE

AUTOMATIONDIRECT.com