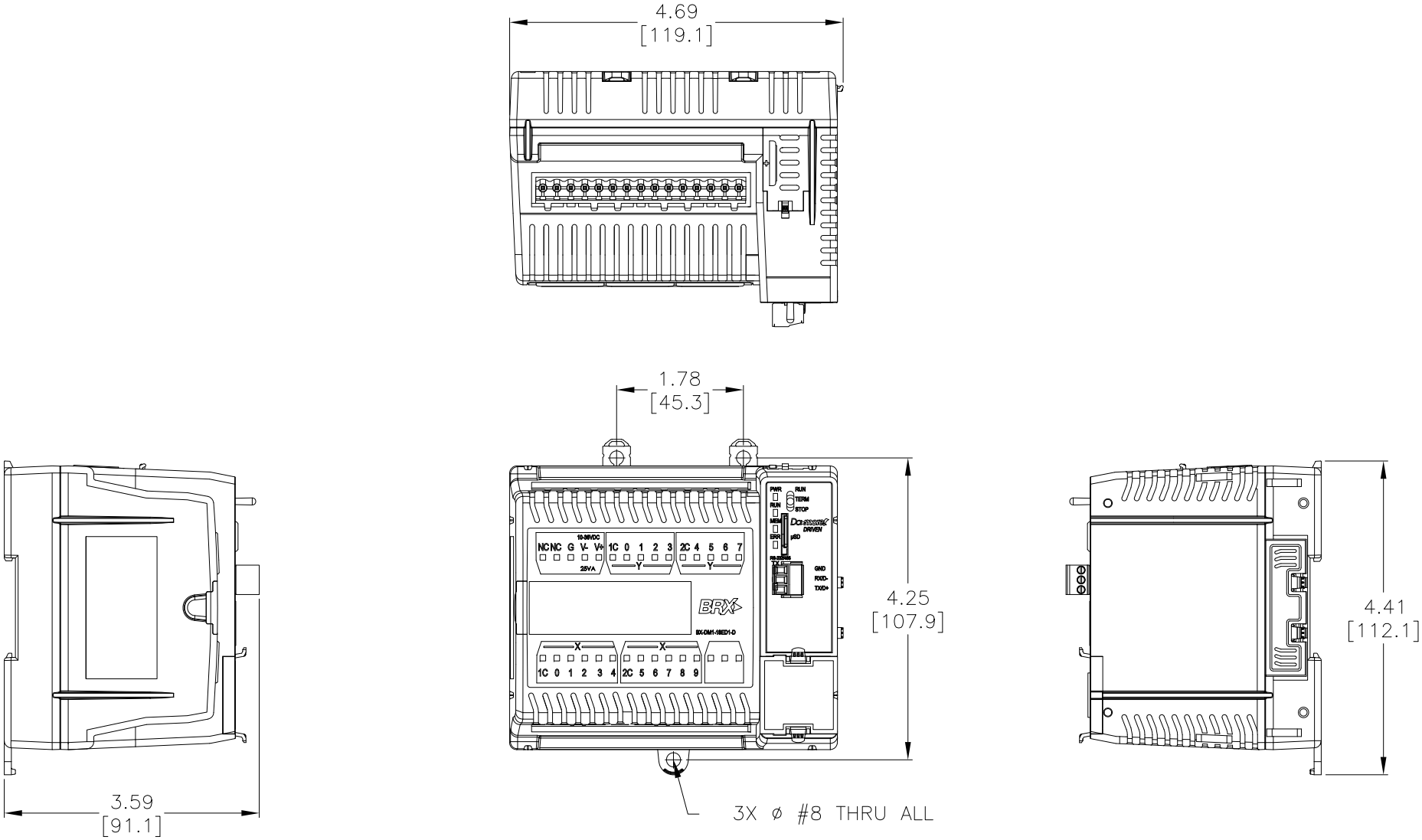

NOTES:

1. DIMENSIONS CAN BE CHANGED BY MANUFACTURER WITHOUT NOTICE.
2. DIMENSIONS DO NOT IMPLY TOLERANCE.

BX-DM1-18ED1-D

Units: inches [mm]

Scale: Full

BRX MPU, with Do-more! DM1 TECHNOLOGY,
24 VDC POWERED,
10 PT DISCRETE IN,
8 PT DISCRETE SINKING OUT

AUTOMATIONDIRECT.com