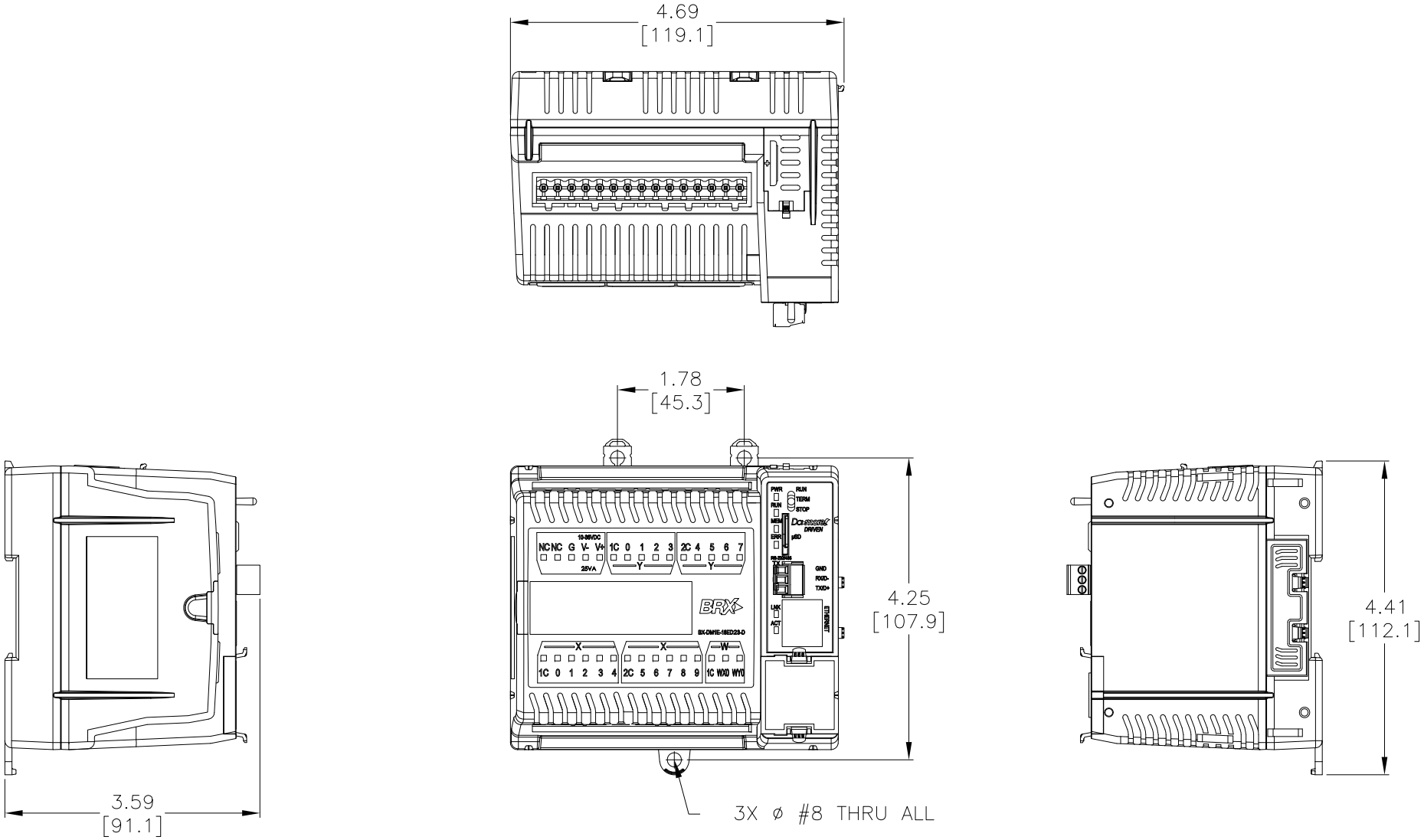

NOTES:

1. DIMENSIONS CAN BE CHANGED BY MANUFACTURER WITHOUT NOTICE.
2. DIMENSIONS DO NOT IMPLY TOLERANCE.

BX-DM1E-18ED23-D

Units: inches [mm]

Scale: Full

BRX MPU, with Do-more! DM1 TECHNOLOGY,
ETHERNET, 24 VDC POWERED,
10 PT DISCRETE IN, 8 PT DISCRETE SOURCING OUT,
ANALOG 1-CH IN & 1-CH OUT

AUTOMATIONDIRECT.com