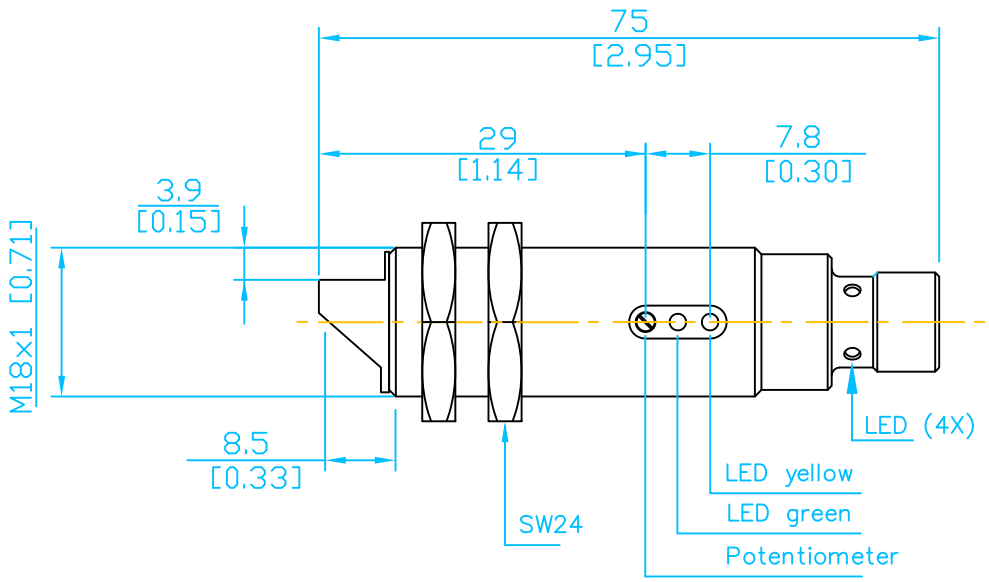

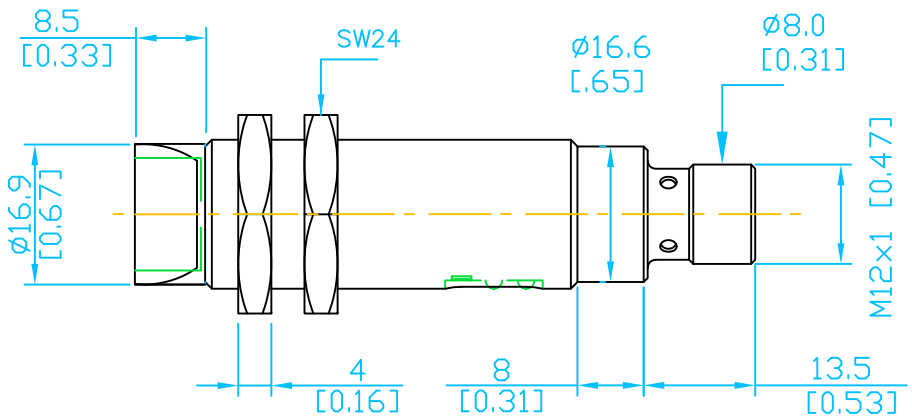

Typical Dimensions

C18R-0P-2E

Units: [inches] mm
Scale: Full

PhotoElectric Sensor

AUTOMATIONDIRECT.com