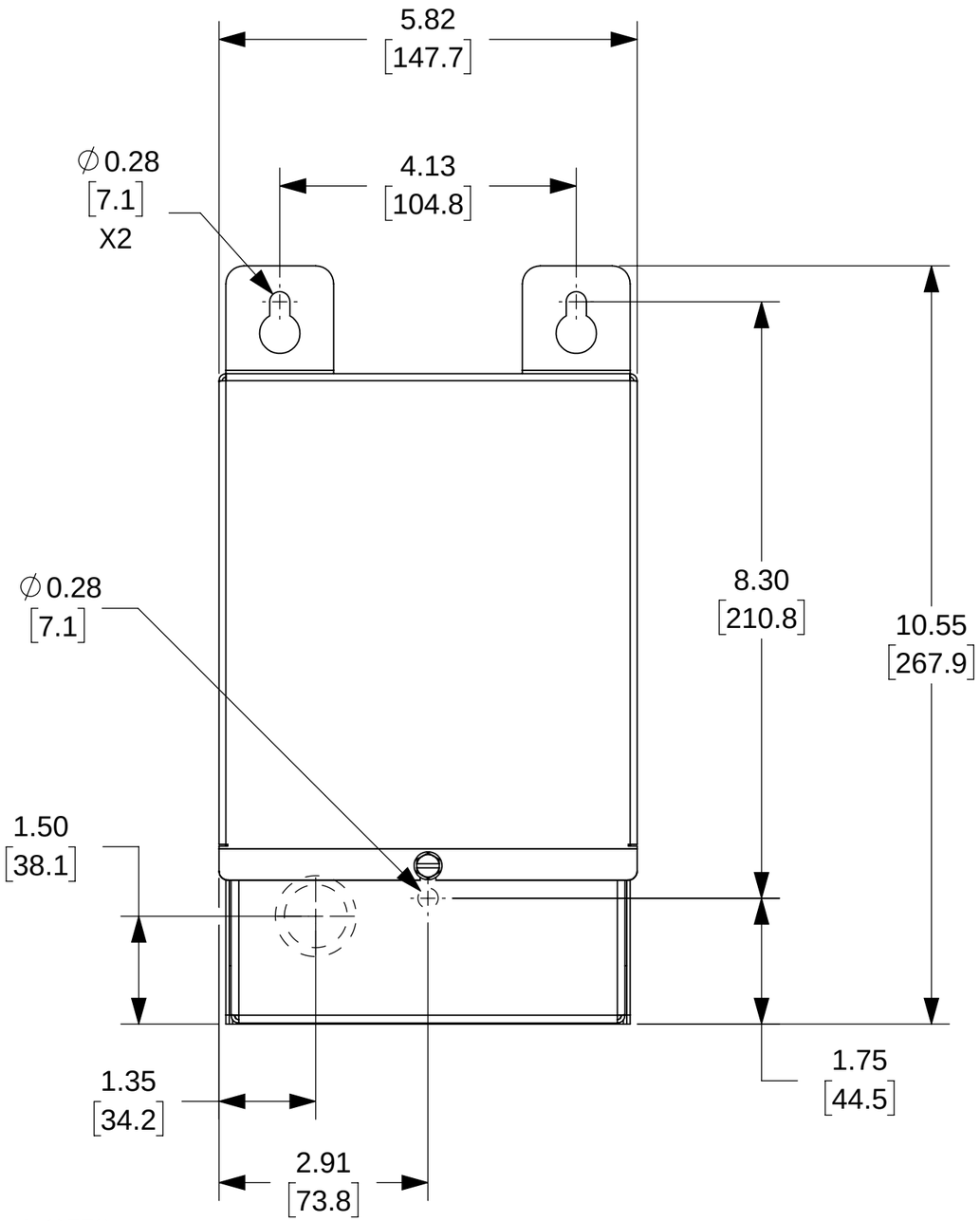

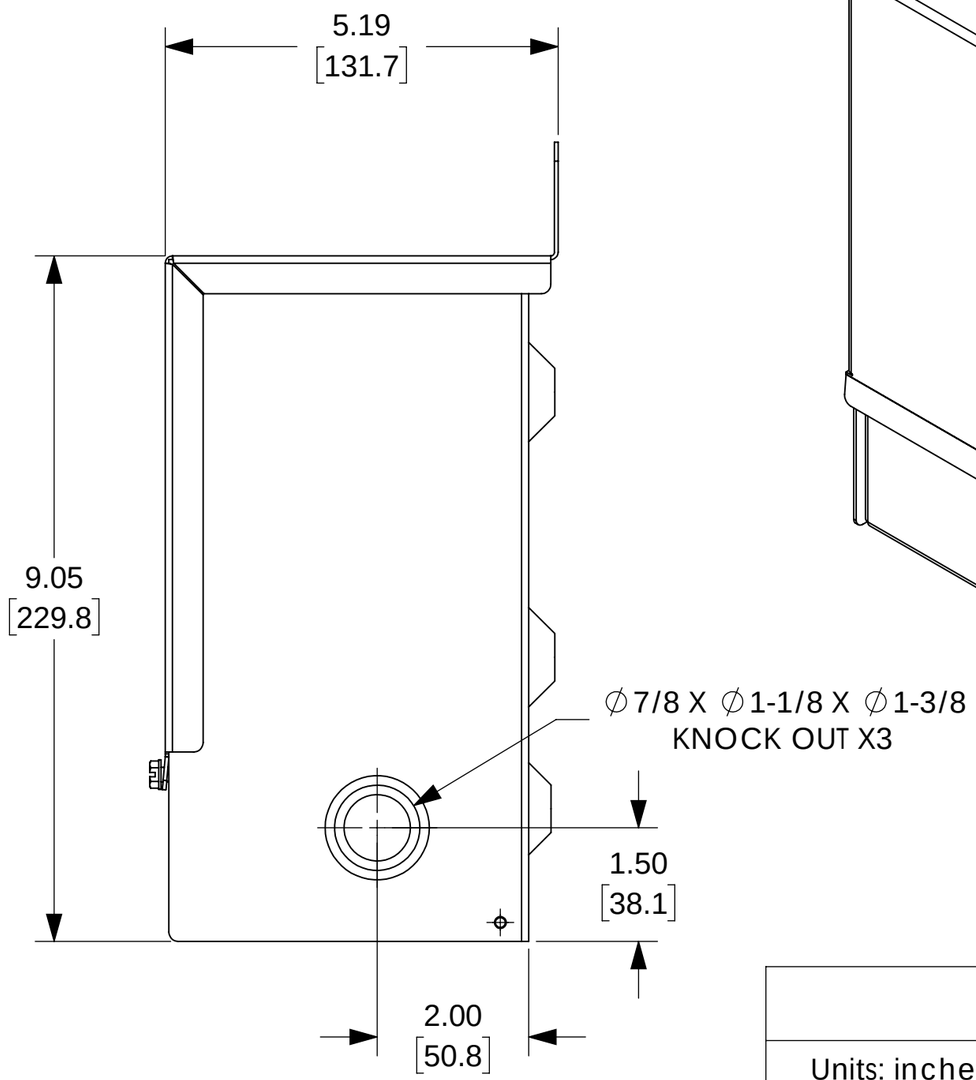

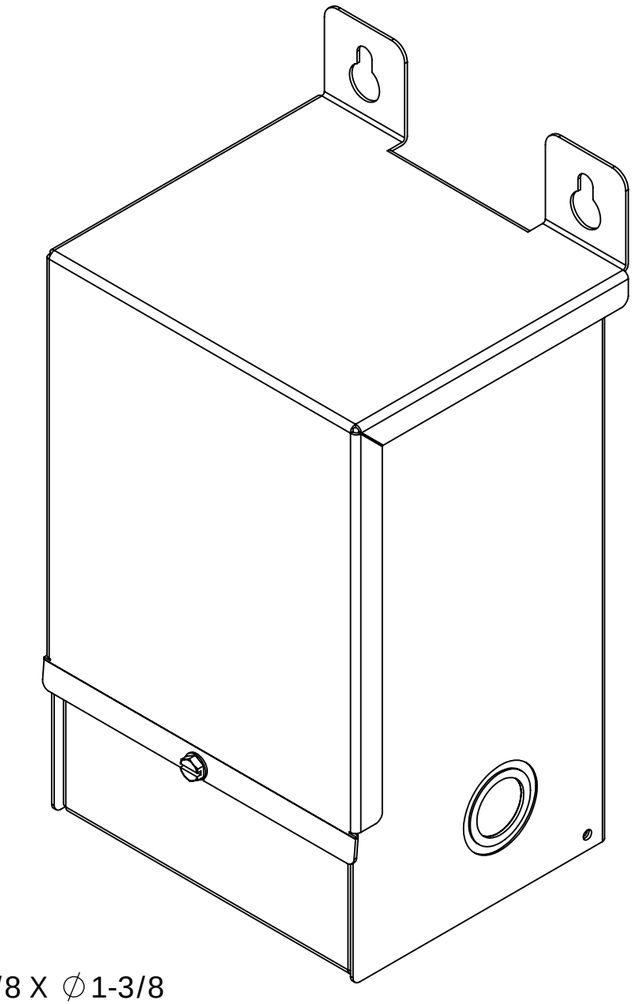

NOTES:

1. DIMENSIONS CAN BE CHANGED BY MANUFACTURER WITHOUT NOTICE.
2. DIMENSIONS DO NOT IMPLY TOLERANCE.

C1F1C0LES

Units: inches [mm]
Scale: Full

ENCAPSULATED TRANSFORMER: 1 KVA, 480X240 / 240X120

AUTOMATIONDIRECT.com