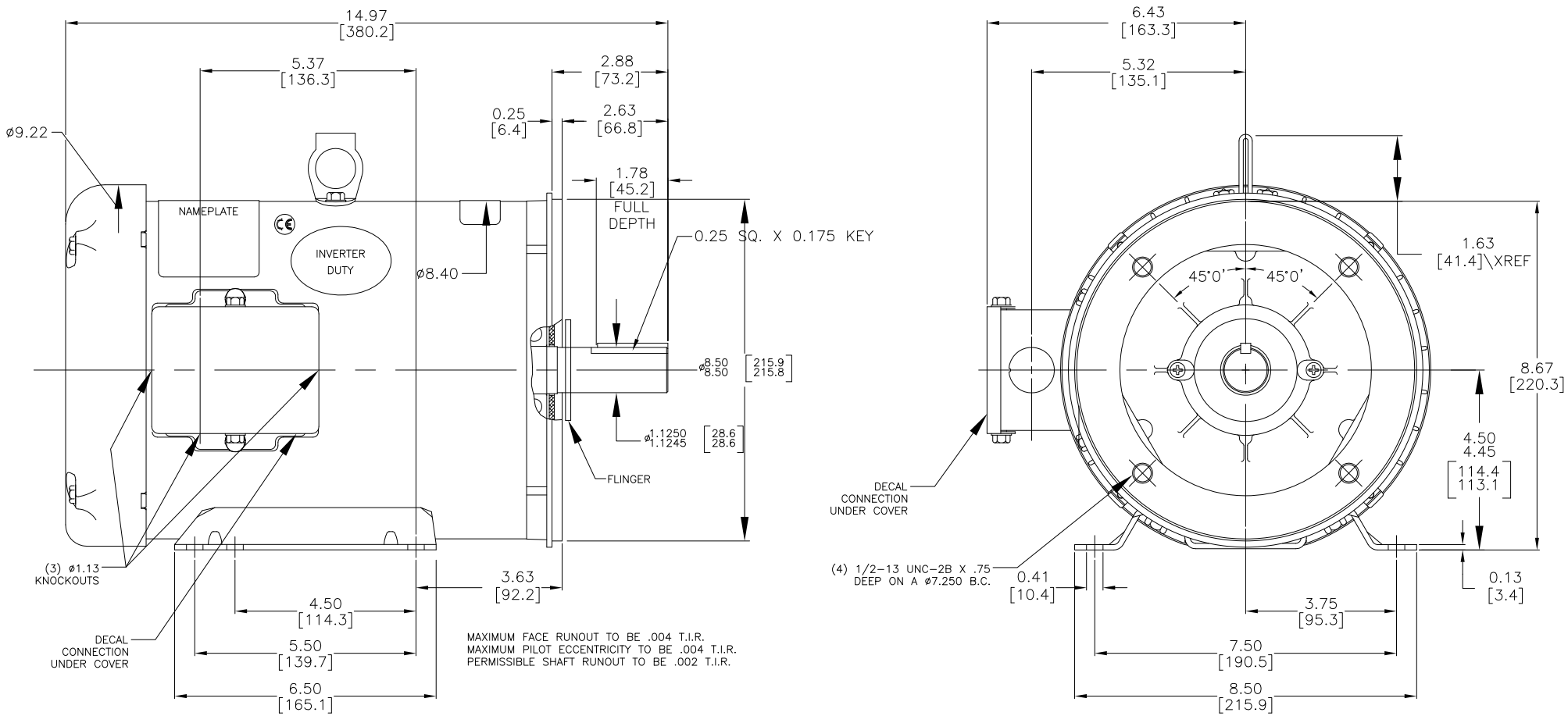

NOTES:

1. DIMENSIONS CAN BE CHANGED BY MANUFACTURER WITHOUT NOTICE.
2. DIMENSIONS DO NOT IMPLY TOLERANCE.

C383B

Units: inches [mm]

Scale: Full

MARATHON XRI SERIES PREMIUM EFFICIENCY AC INDUCTION MOTOR, GENERAL PURPOSE AND INVERTER DUTY, 4-in-1, 3 HP, 3-PH, 575 VAC, 1800 RPM, TEFC, 182TC FRAME

AUTOMATIONDIRECT.com