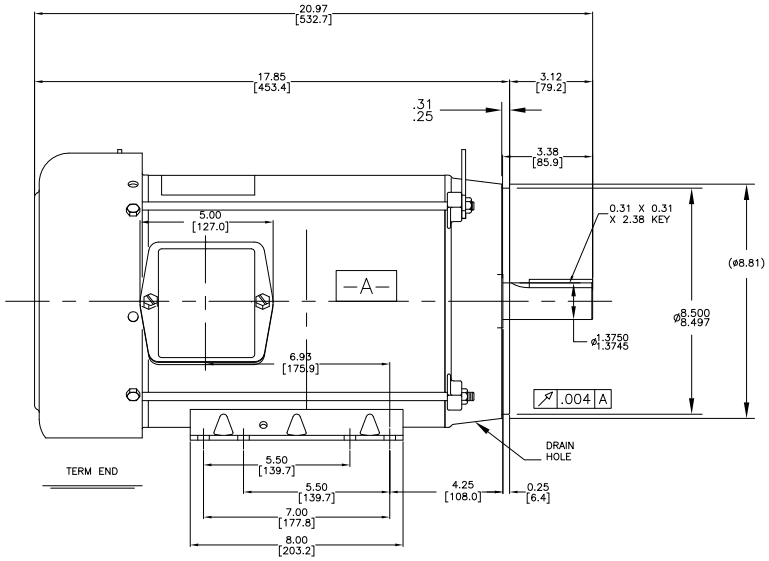

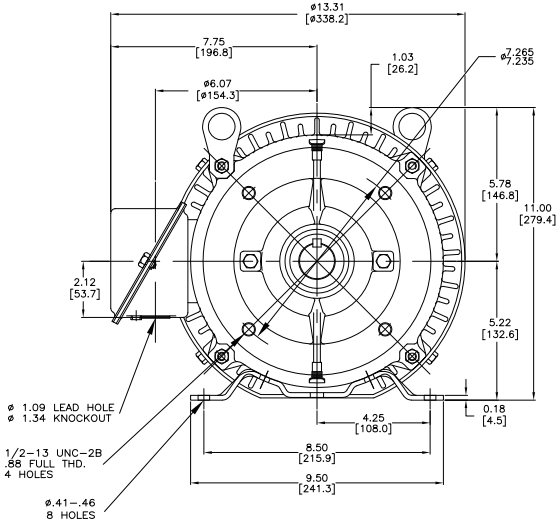

NOTES:

1. NAMEPLATE TO BE READ FROM C'BOX SIDE OF MOTOR.
2. BOX CAN BE MOUNTED IN 90° STEPS.
3. BOX CAN BE MOUNTED ON OPPOSITE SIDE BY REMOVING BRACKETS AND TURNING FRAME 180° (EXCEPT AS NOTED.)
4. BASE IS REMOVABLE.
5. PROVISIONS ONLY FOR DRIP COVER.

NOTES:

1. DIMENSIONS CAN BE CHANGED BY MANUFACTURER WITHOUT NOTICE.
2. DIMENSIONS DO NOT IMPLY TOLERANCE.

C392B

Units: inches [mm]

Scale: Full

MARATHON XRI SERIES PREMIUM EFFICIENCY AC INDUCTION MOTOR,GENERAL PURPOSE AND INVERTER DUTY, 4-in1, 10 HP, 3-PH, 208-230/460 VAC, 3600 RPM, TEFC, 215TC FRAME

AUTOMATIONDIRECT.com