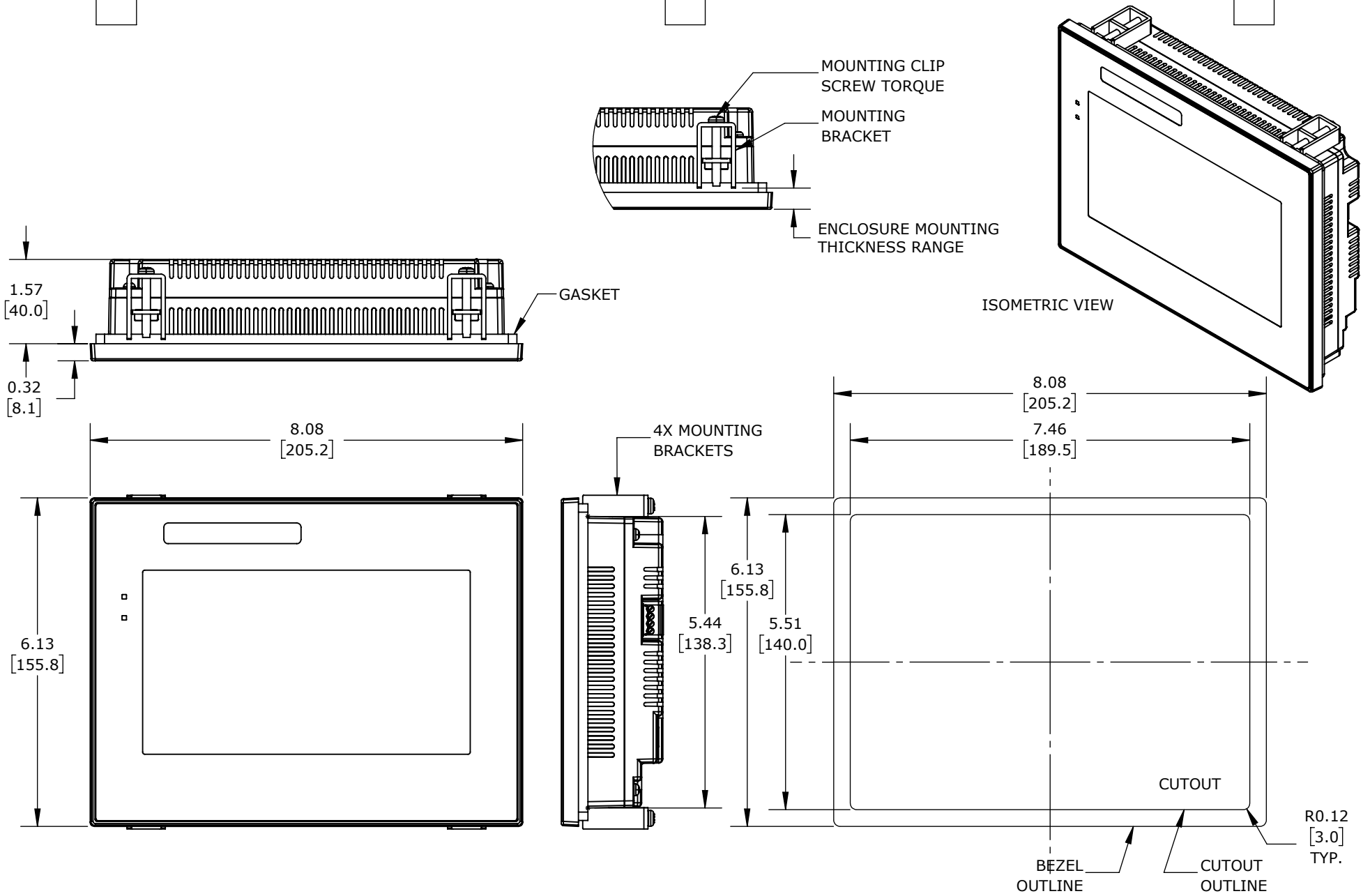

C-MORE CM5 SERIES TOUCH SCREEN HMI, 7IN COLOR TFT LCD, ANALOG RESISTIVE, WIDESCREEN, 800 X 480 PIXEL, WVGA, LED BACKLIGHT, (2) SERIAL, (1) ETHERNET, (2) USB PORTS, AND (1) MEMORY CARD SLOT.			CM5-T7W				AutomationDirect.com 1-800-633-0405
3rd ANGLE	NOT TO SCALE	PART DIMENSIONS MAY DIFFER SLIGHTLY DUE TO MANUFACTURER'S VARIANCES	METRIC UNITS USED FOR PART DESIGN	UNLESS OTHERWISE SPECIFIED UNITS ARE:	**inch [mm]**	LATEST VERSION 10/24/2023	SHEET 1 OF 1