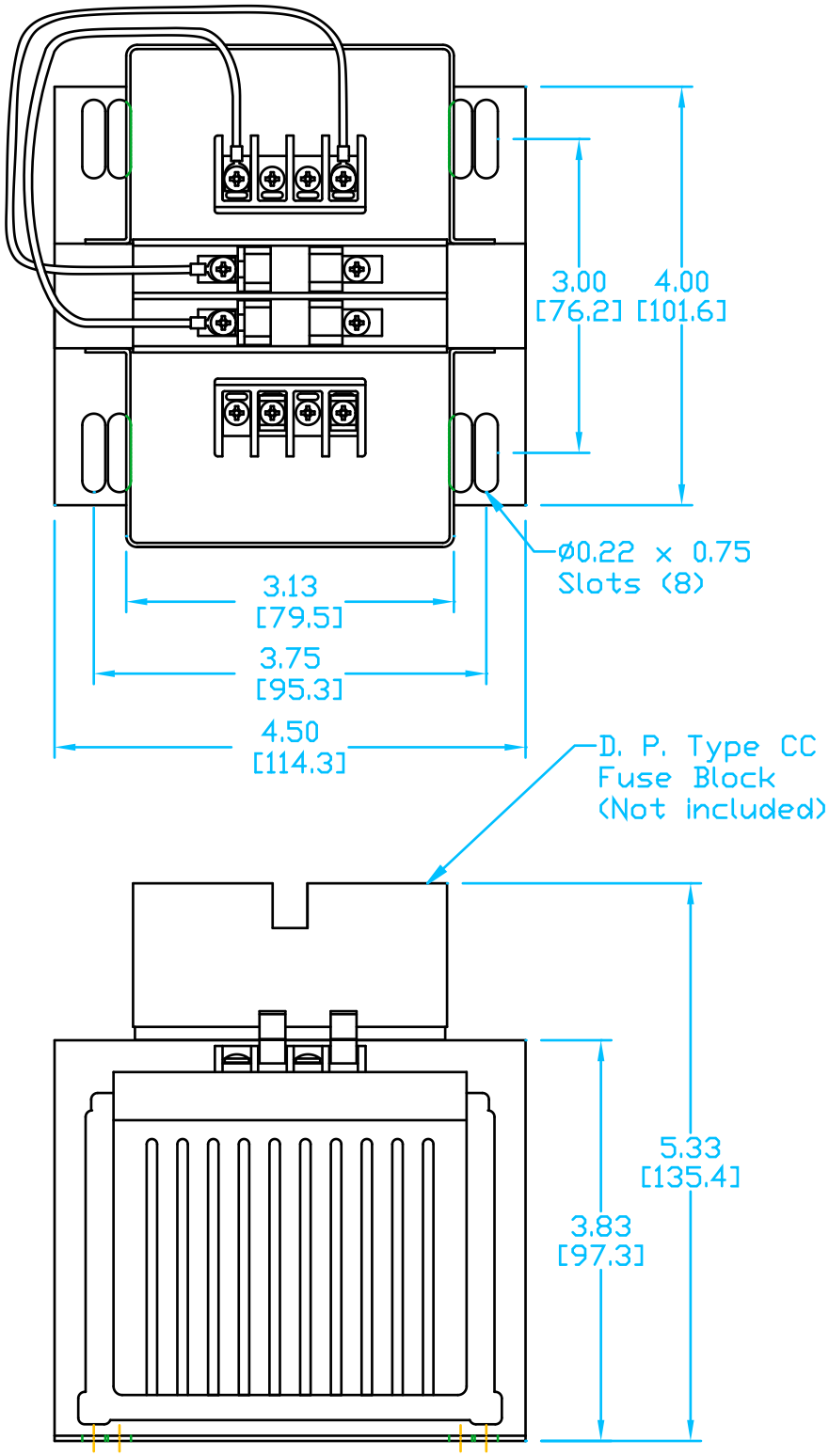

CPT115-250-F

Units: inches [mm]
Tolerance: ±0.06" [±2mm]
Full Scale
ø denotes diameter

AUTOMATIONDIRECT.com