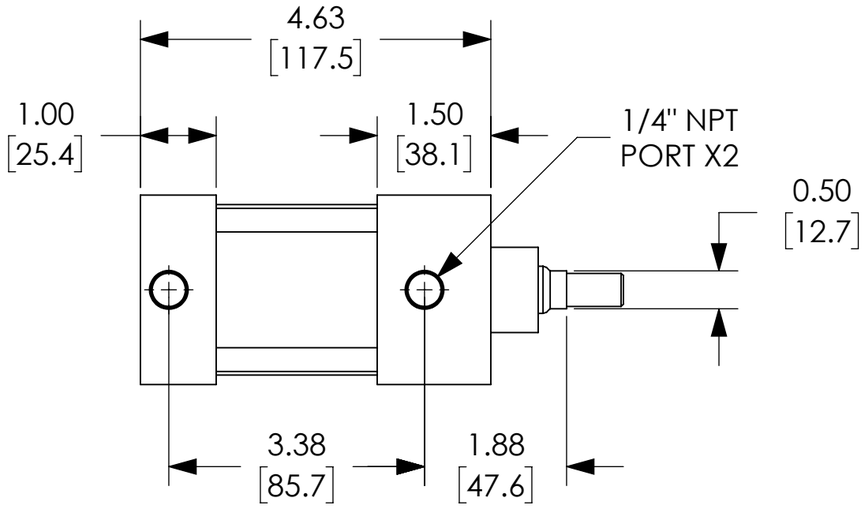

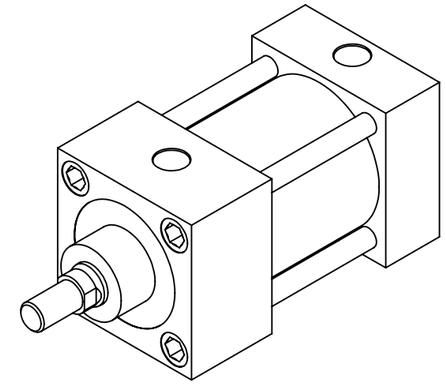

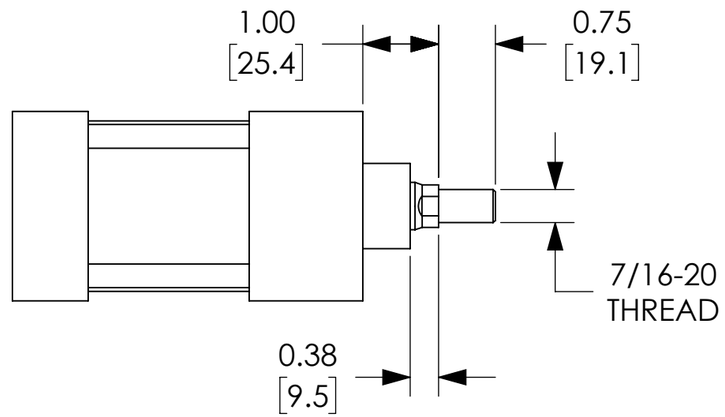

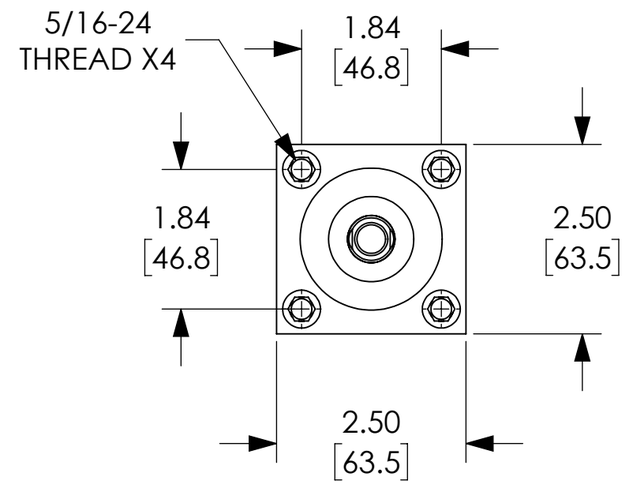

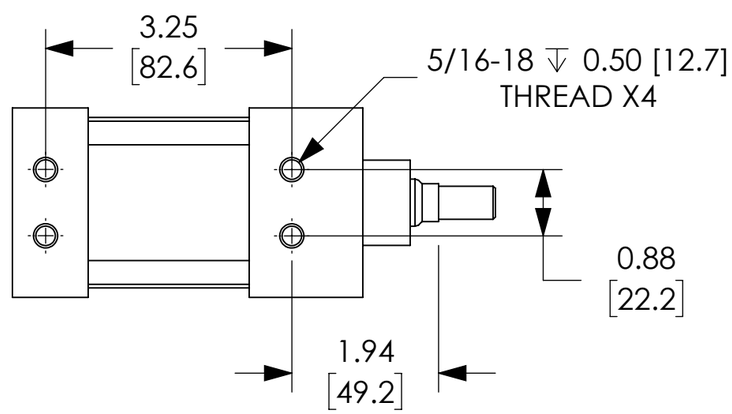

NOTES:

1. DIMENSIONS CAN BE CHANGED BY MANUFACTURER WITHOUT NOTICE.
2. DIMENSIONS DO NOT IMPLY TOLERANCE.

D232010DT-M

Units: inches [mm]
Scale: Full

NITRA NFPA CYLINDER: 2" BORE, 1" STROKE, MAG PISTON

AUTOMATIONDIRECT.com