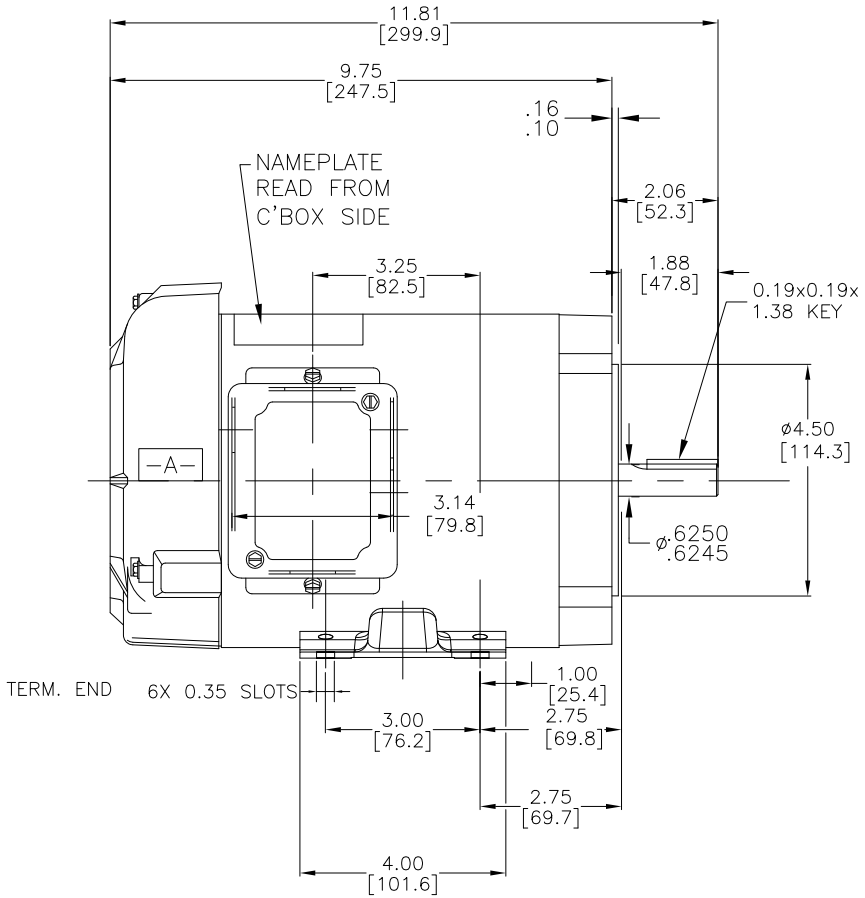


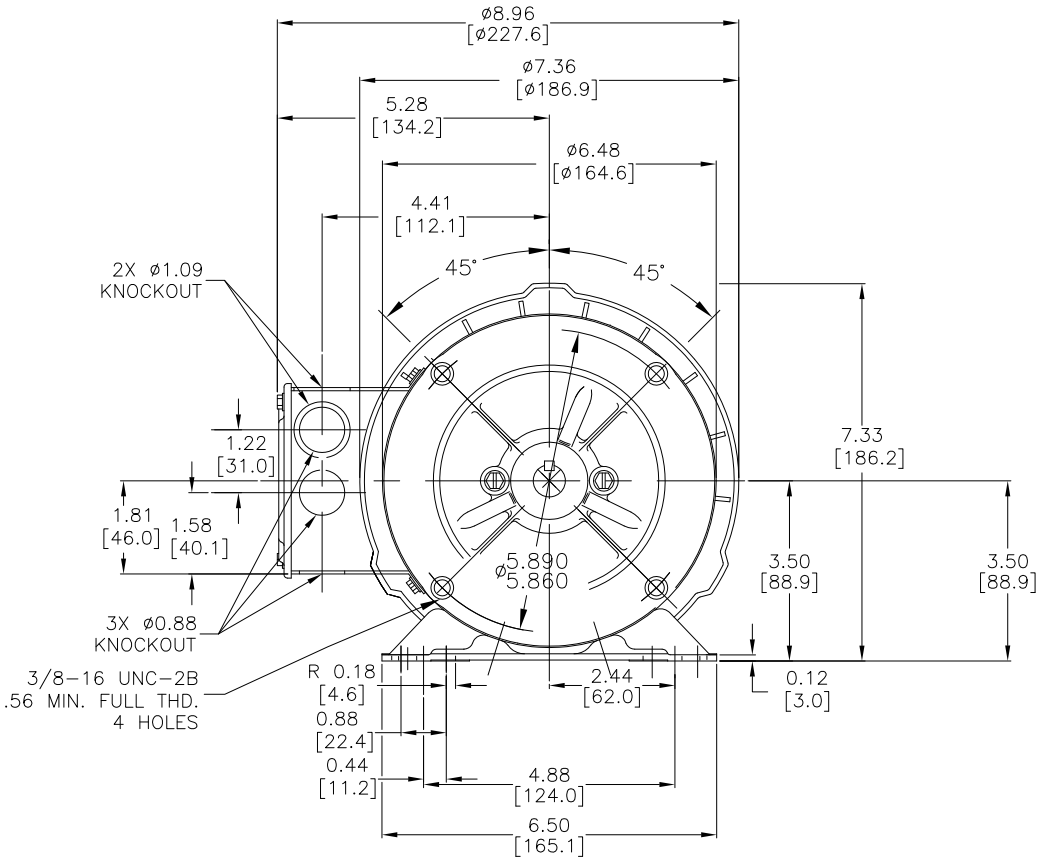


NOTES:

1. DIMENSIONS CAN BE CHANGED BY MANUFACTURER WITHOUT NOTICE.
2. DIMENSIONS DO NOT IMPLY TOLERANCE.

D392

Units: inches [mm]

Scale: Full

MARATHON GENERAL PURPOSE AND INVERTER DUTY MOTOR, 4-in-1
3/4 HP, 3-PH, 208-230/460 VAC, 3600 RPM, TEFC, 56C FRAME

AUTOMATIONDIRECT.com