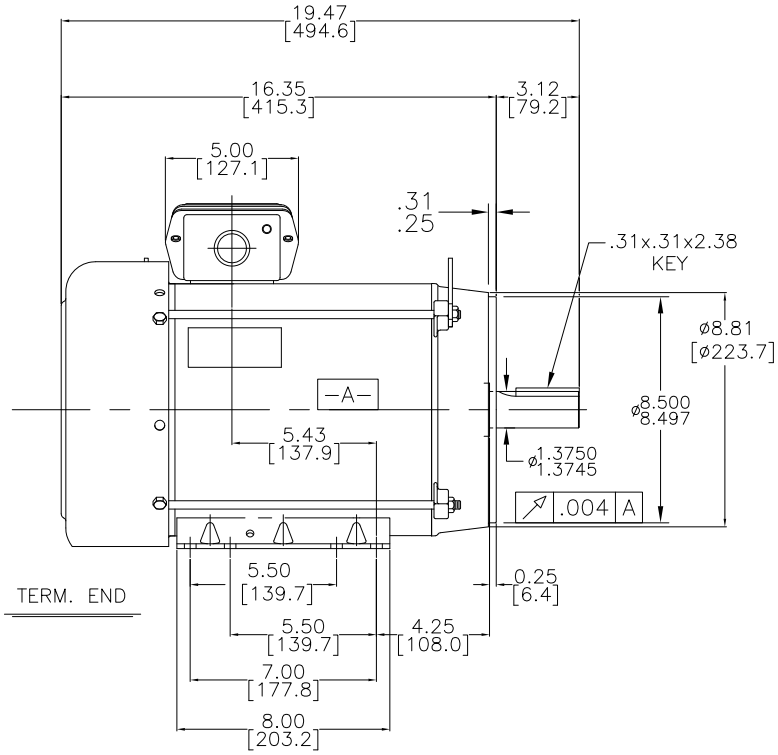

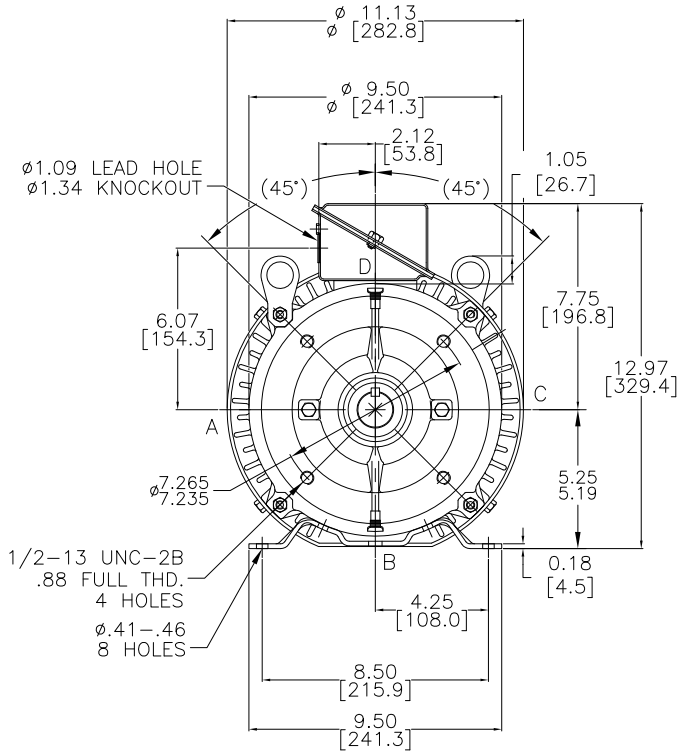

NOTES:

1. DIMENSIONS CAN BE CHANGED BY MANUFACTURER WITHOUT NOTICE.
2. DIMENSIONS DO NOT IMPLY TOLERANCE.

E2011A

Units: inches [mm]

Scale: Full

MARATHON XRI SERIES PREMIUM EFFICIENCY AC INDUCTION MOTOR,GENERAL PURPOSE AND INVERTER DUTY, 3 HP, 3-PH, 208-230/460 VAC, 1200 RPM, TEFC, 213TC FRAME

AUTOMATIONDIRECT.com