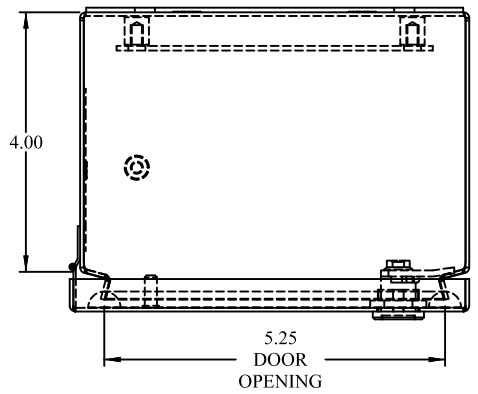

TOP VIEW

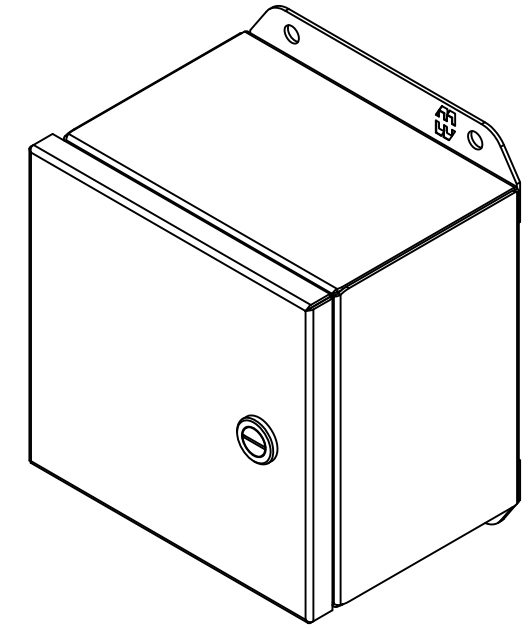

ISOMETRIC VIEWS

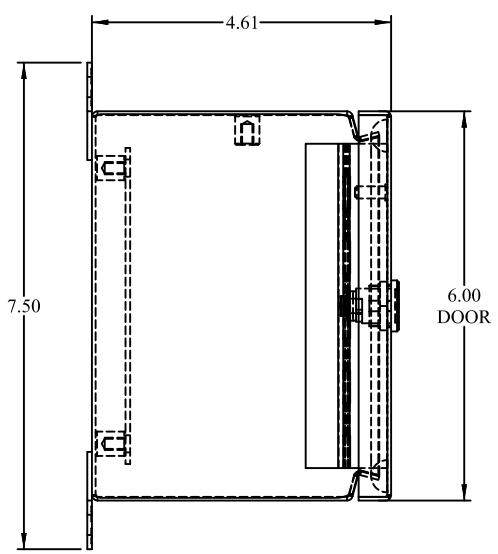

SIDE VIEW

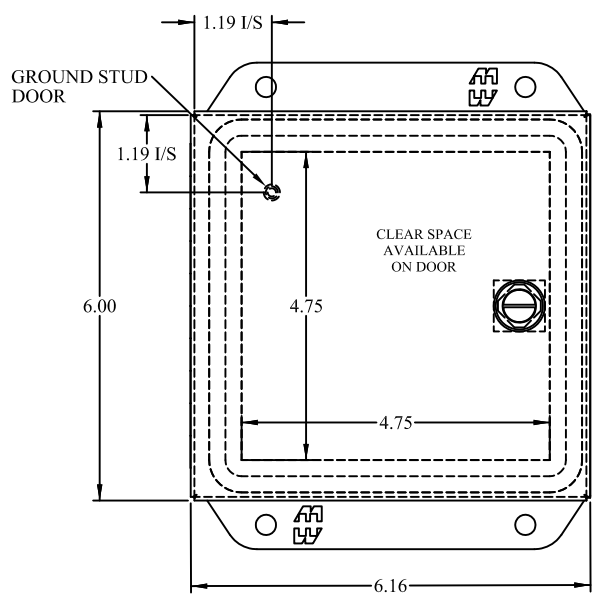

FRONT VIEW

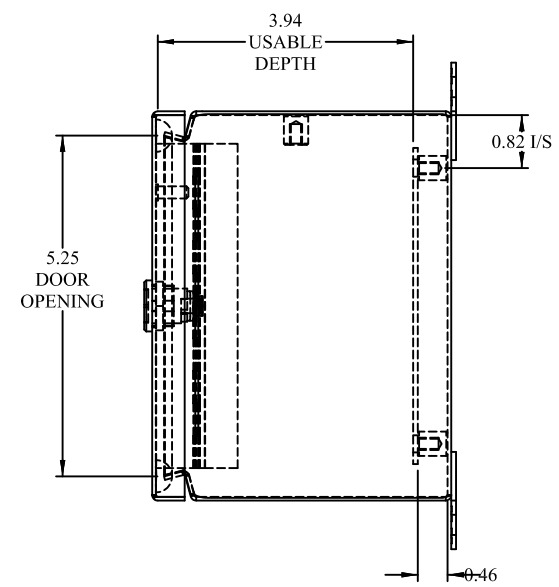

SIDE VIEW

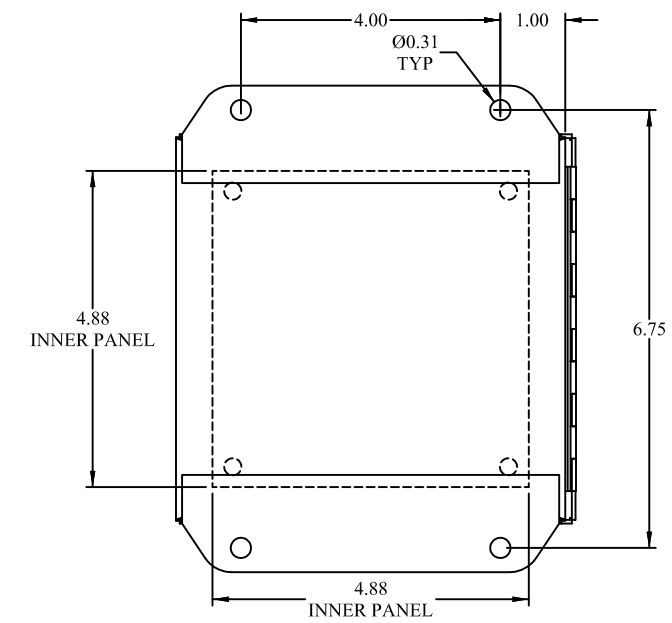

BACK VIEW

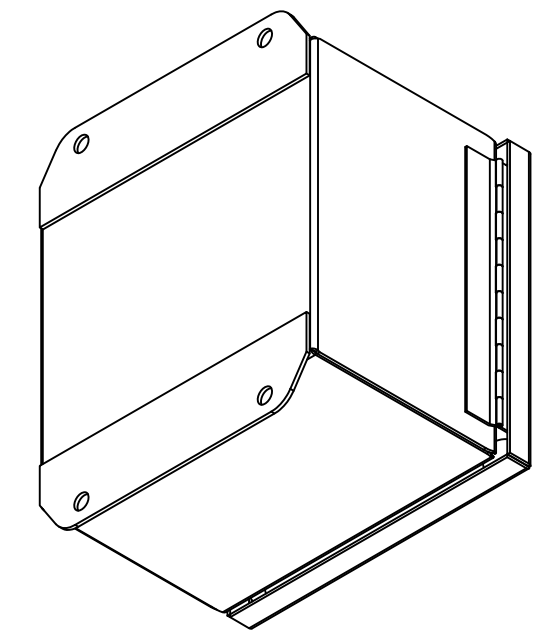

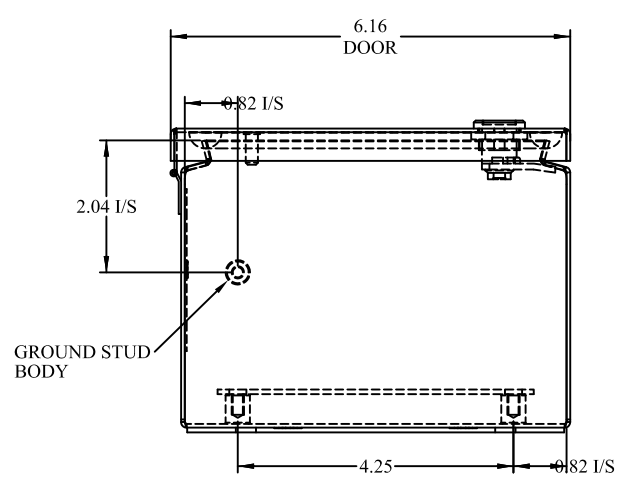

BOTTOM VIEW

HAMMOND MANUFACTURING.

www.hammondmfg.com

Data subject to change without notice.

Part # : EJ664	Date : Apr. 2, 2019
Link:www.hammfg.com/EJ664	