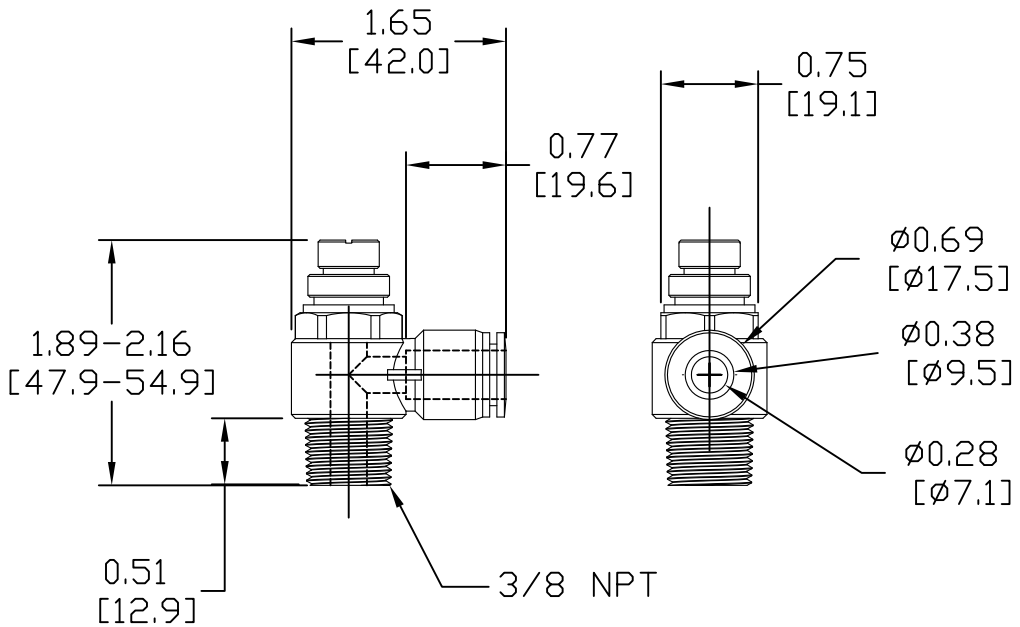

FVS38-38N

Units: inches [mm]

Scale: Full 1:1

PNEUMATIC FITTING
PUSH TO CONNECT
3/8 IN x 3/8 NPT

AUTOMATIONDIRECT.com