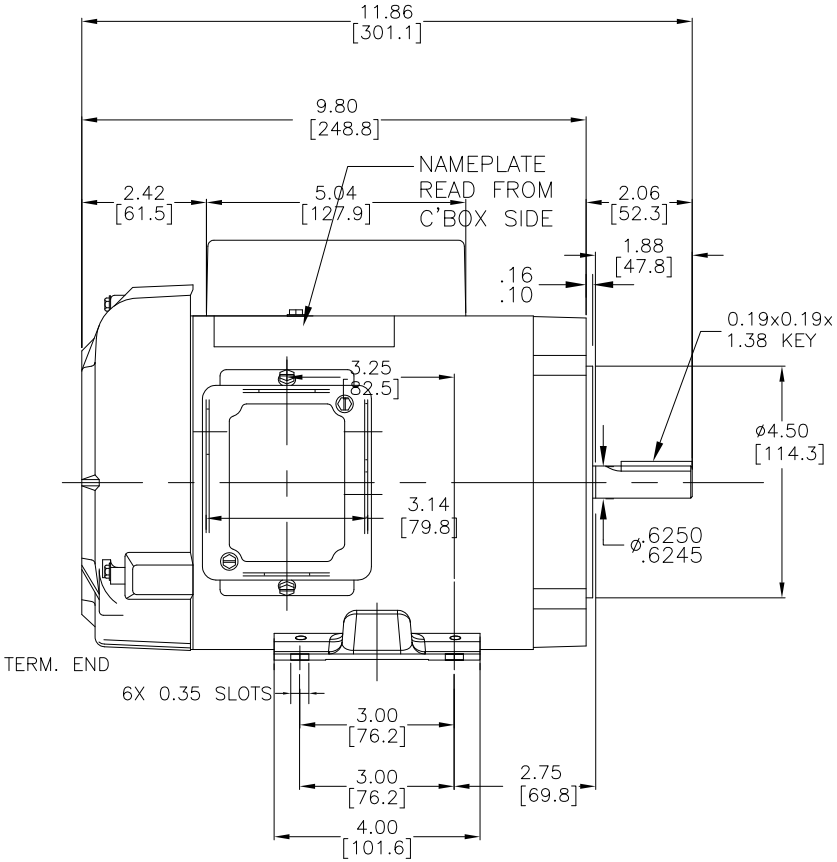

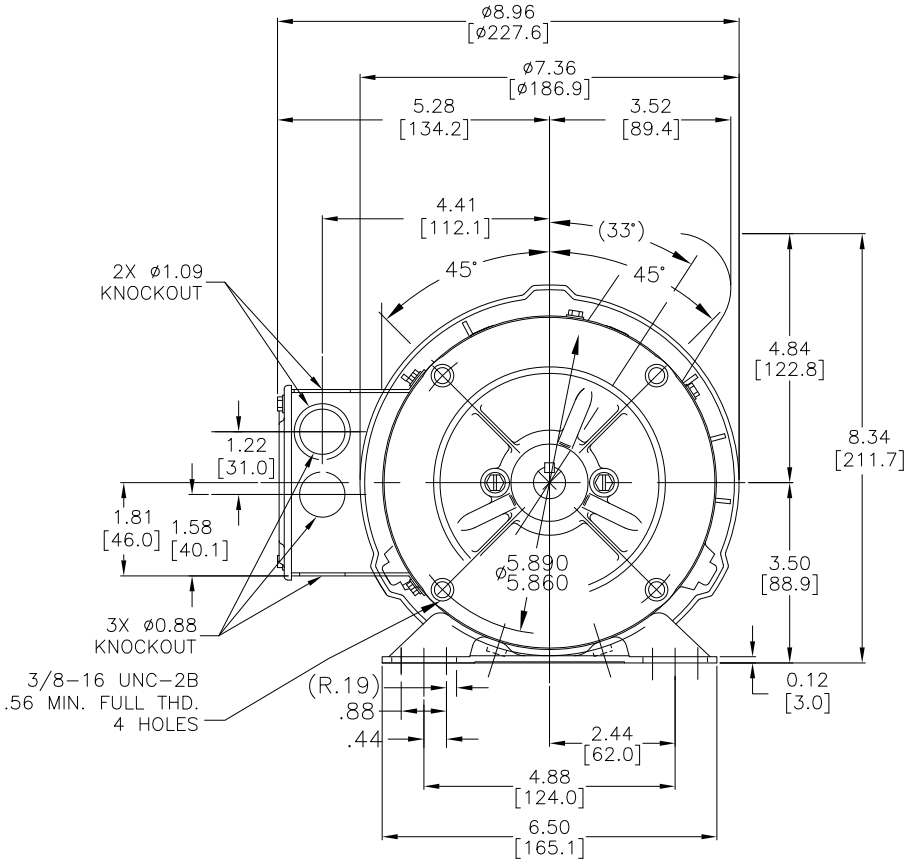

NOTES:

1. DIMENSIONS CAN BE CHANGED BY MANUFACTURER WITHOUT NOTICE.
2. DIMENSIONS DO NOT IMPLY TOLERANCE.

G570

Units: inches [mm]

Scale: Full

MARATHON STANDARD PERFORMANCE
GENERAL PURPOSE 4-in-1
1/3 HP, 1-PH, 115/208-230 VAC, 3600 RPM,
TEFC, 56C FRAME

AUTOMATIONDIRECT.com