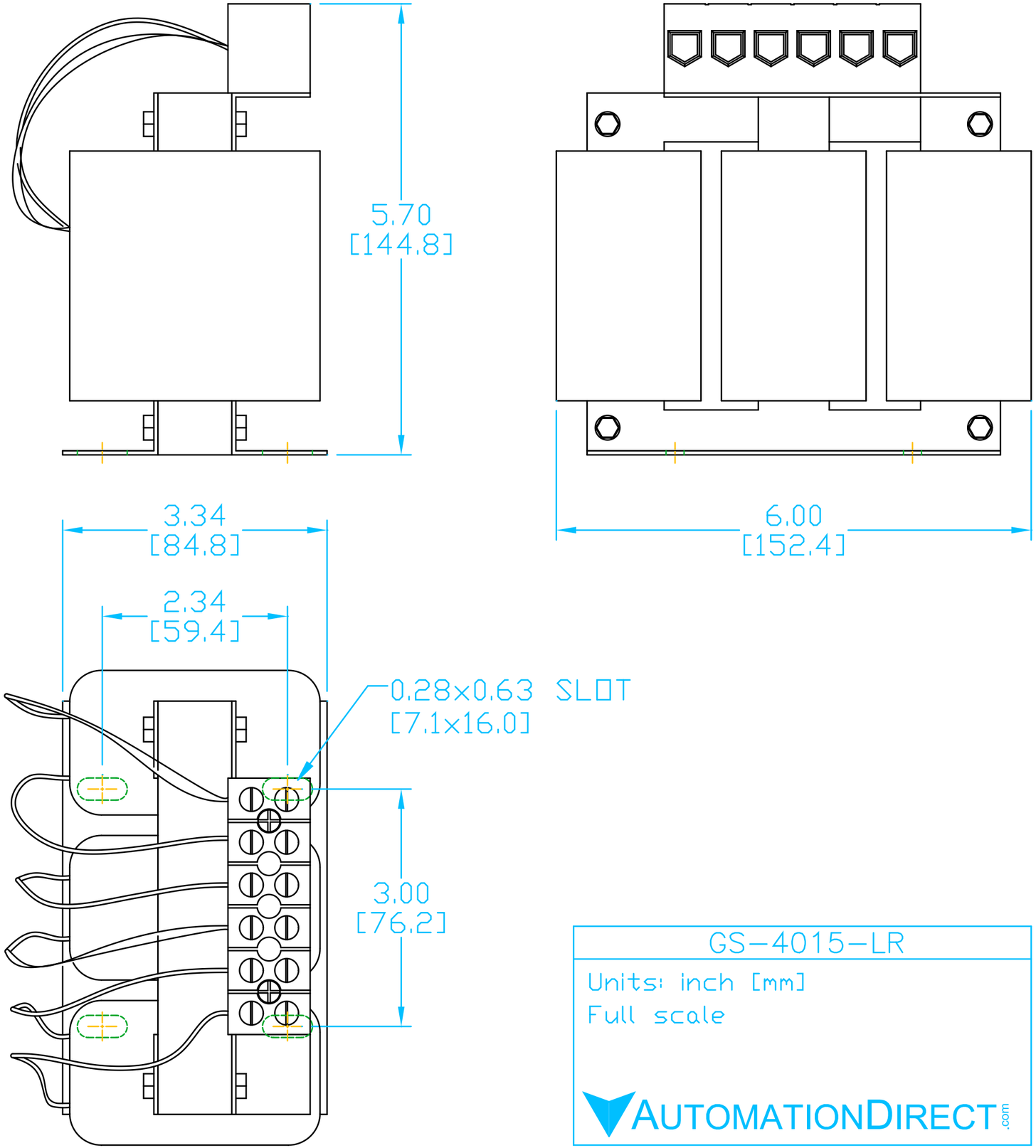
5.70
[144.8]
6.00
[152.4]
3.34
[84.8]
2.34
[59.4]
0.28x0.63 SLOT
[7.1x16.0]
3.00
[76.2]
GS-4015-LR
Units: inch [mm]
Full scale
AUTOMATIONDIRECT.com