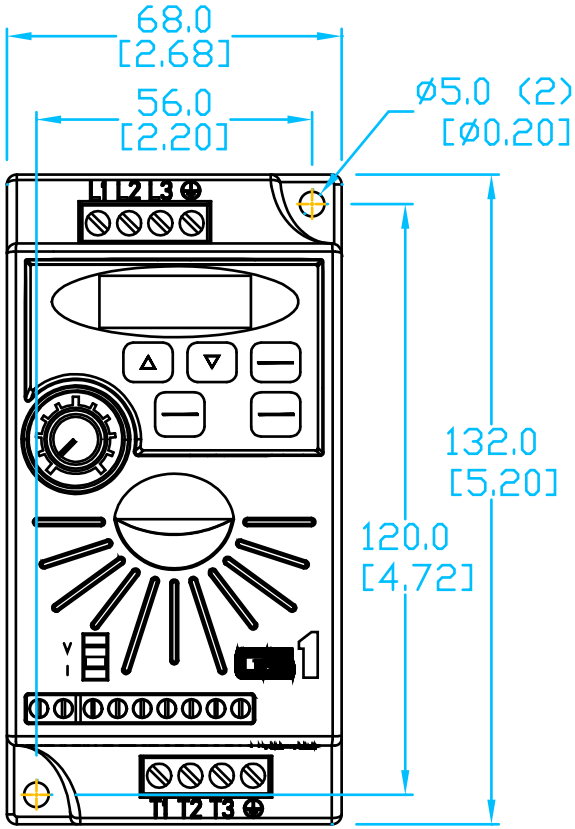

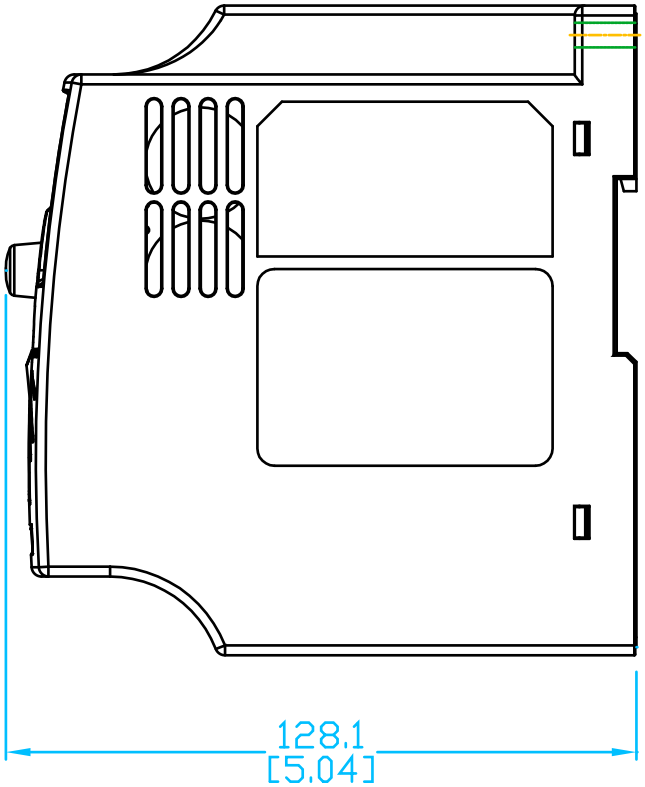

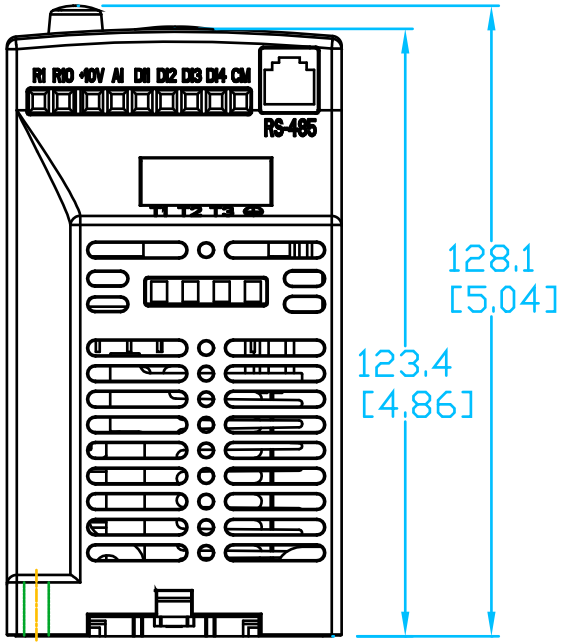

GS1-20P2

Units: mm [inches]
Full Scale
( ) denotes # of similar objects
ø denotes diameter

AUTOMATIONDIRECT.com