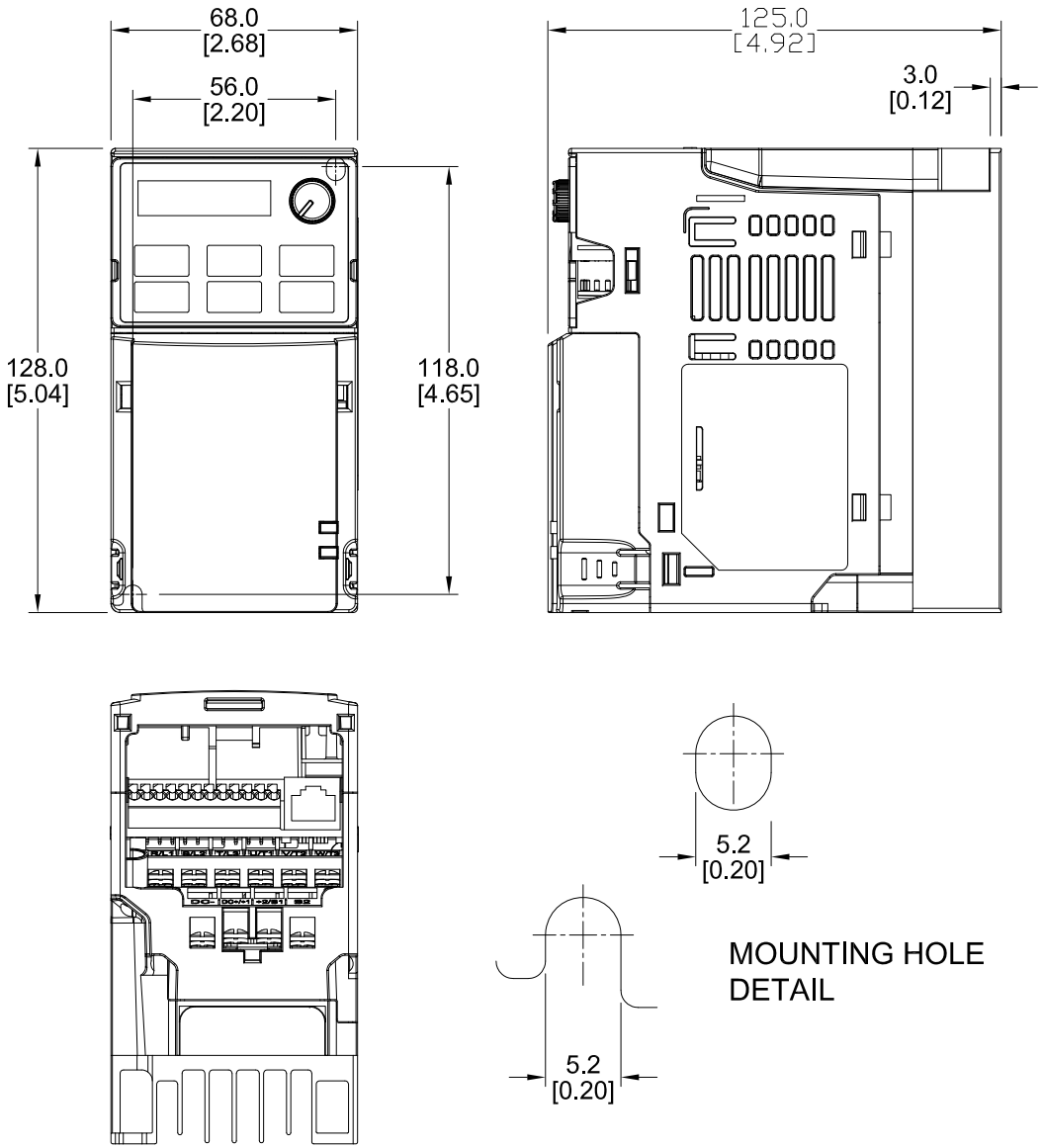

NOTES:

1. DIMENSIONS CAN BE CHANGED BY MANUFACTURER WITHOUT NOTICE.

2. DIMENSIONS DO NOT IMPLY TOLERANCE.

GS21-20P5

Units: mm [inches]

Scale: Full

DURAPULSE GS20 SERIES AC GENERAL PURPOSE DRIVE, ENCLOSED, 230 VAC, 1/2 HP WITH 1-PH INPUT

AUTOMATIONDIRECT.com