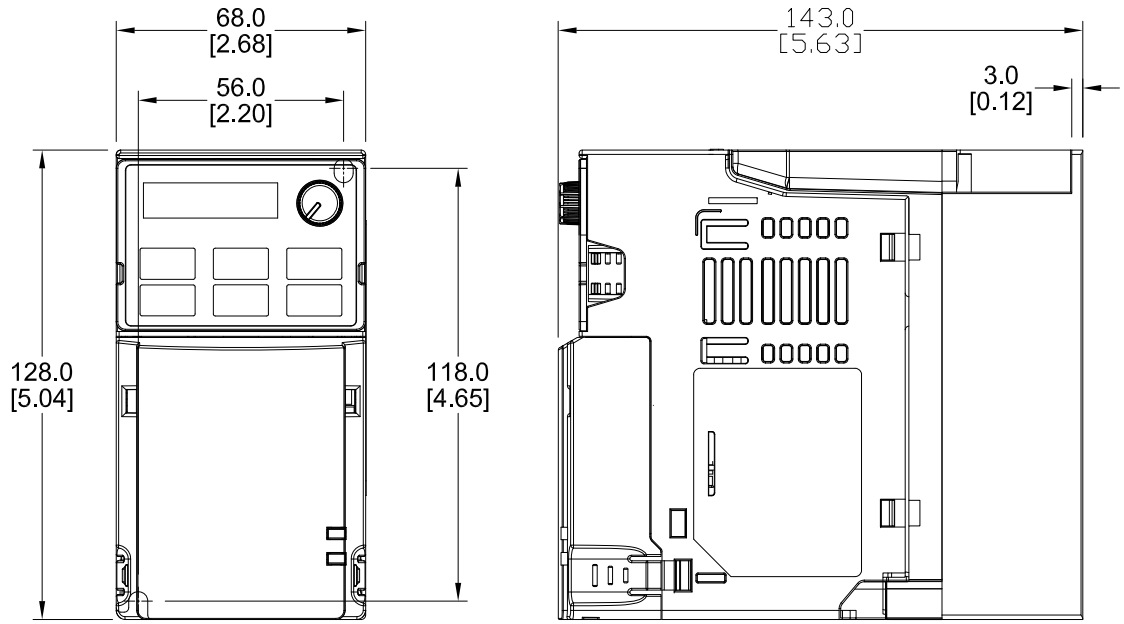

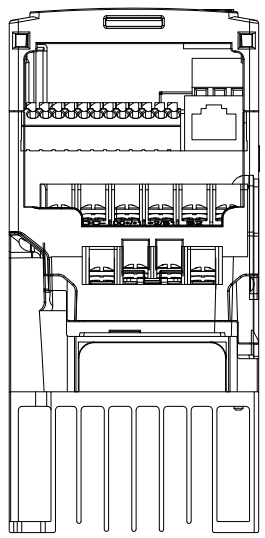

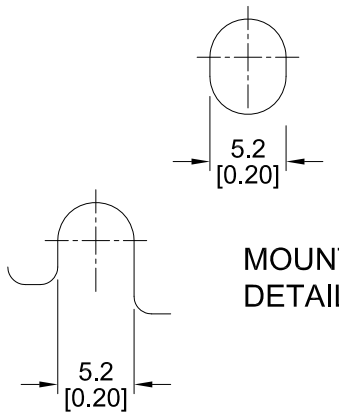

MOUNTING HOLE DETAIL

NOTES:

1. DIMENSIONS CAN BE CHANGED BY MANUFACTURER WITHOUT NOTICE.
2. DIMENSIONS DO NOT IMPLY TOLERANCE.

GS23-41P0

Units: mm [inches]

Scale: Full

DURAPULSE GS20 SERIES AC GENERAL PURPOSE DRIVE, ENCLOSED, 460 VAC, 1 HP WITH 3-PH INPUT

AUTOMATIONDIRECT.com