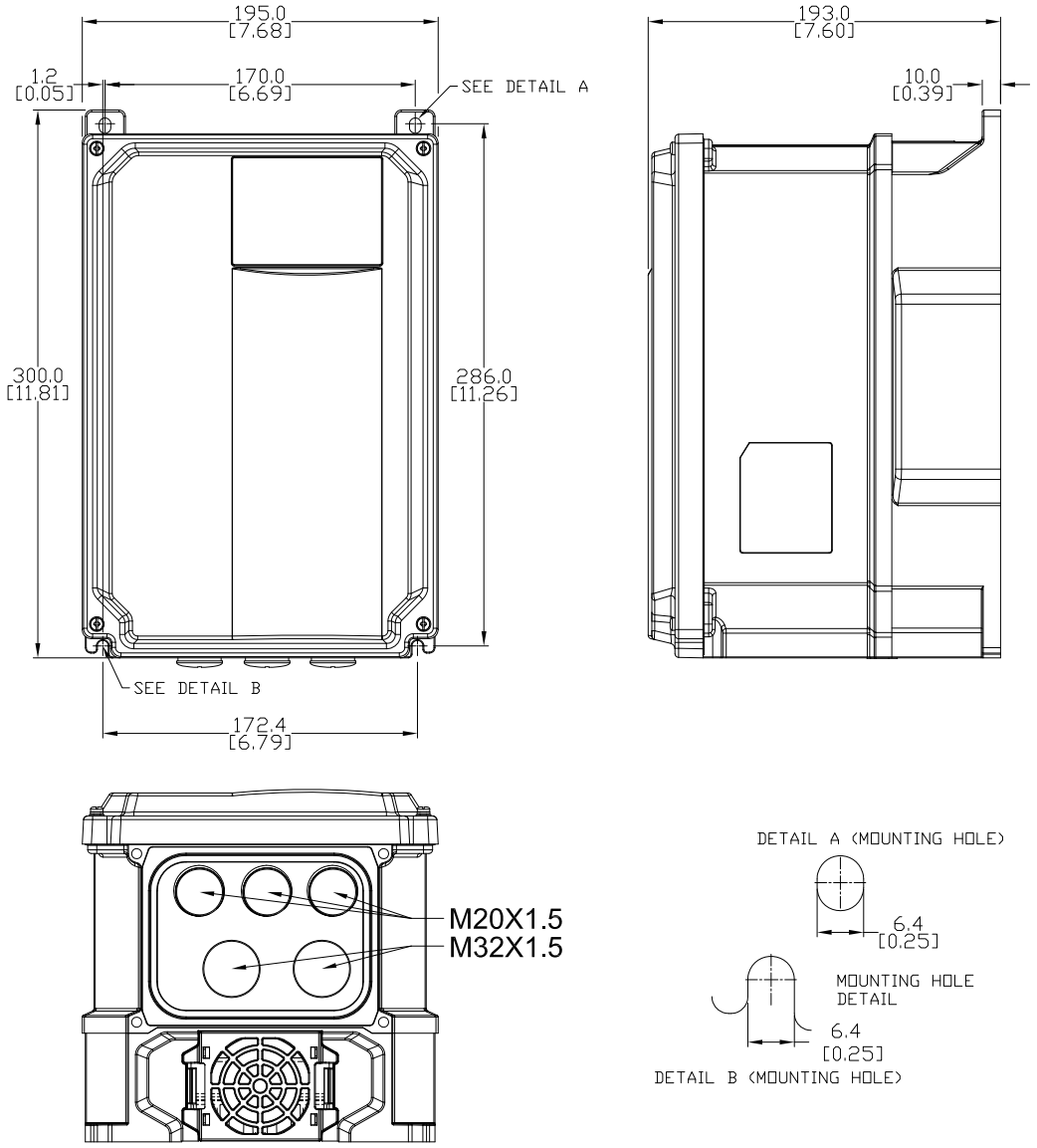

NOTES:

1. DIMENSIONS CAN BE CHANGED BY MANUFACTURER WITHOUT NOTICE.
2. DIMENSIONS DO NOT IMPLY TOLERANCE.

GS23X-27P5

Units: mm [inches]

Scale: Full

DURAPULSE GS20X SERIES AC GENERAL PURPOSE DRIVE, NEMA 4X, 230 VAC, 7-1/2 HP WITH 3-PH INPUT

AUTOMATIONDIRECT.com