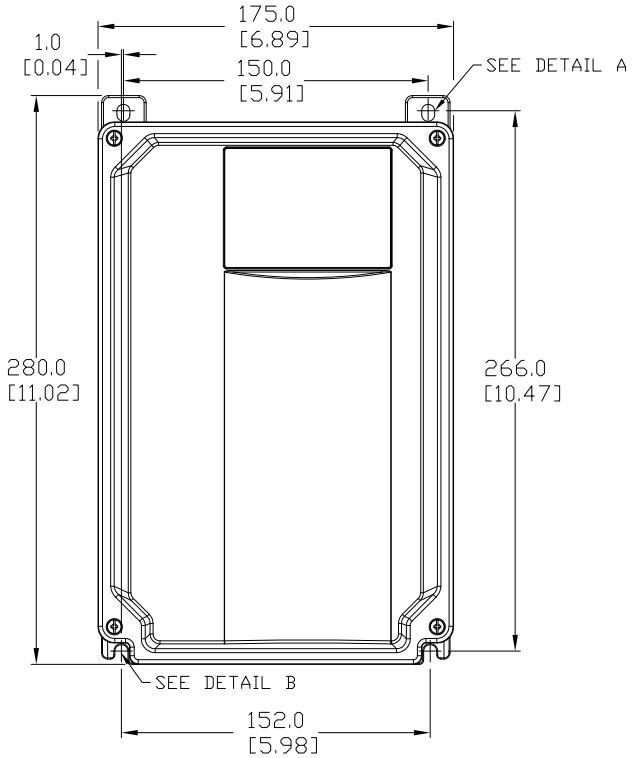

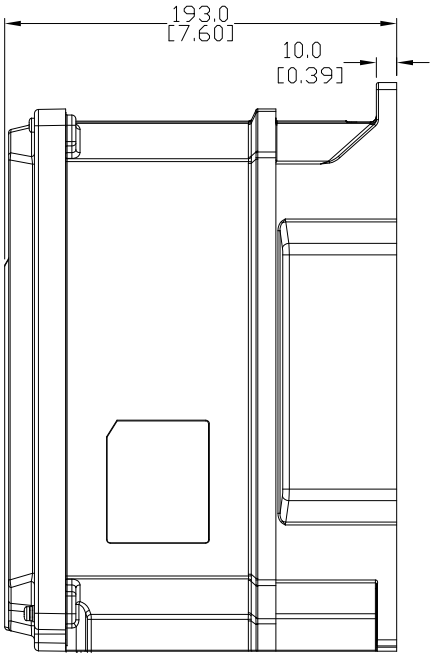

DETAIL A (MOUNTING HOLE)

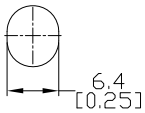

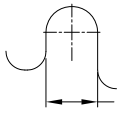

DETAIL B (MOUNTING HOLE)

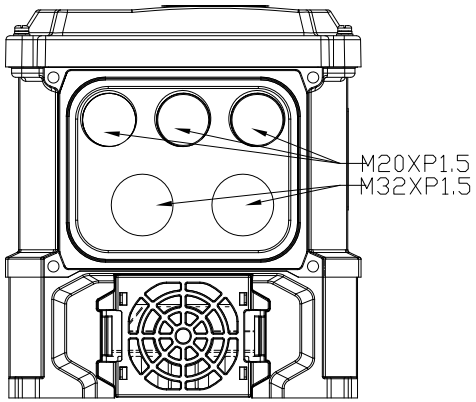

NOTES:

1. DIMENSIONS CAN BE CHANGED BY MANUFACTURER WITHOUT NOTICE.
2. DIMENSIONS DO NOT IMPLY TOLERANCE.

GS23X-45P0

Units: mm [inches]

Scale: Full

DURAPULSE GS20X SERIES AC GENERAL PURPOSE DRIVE, NEMA 4X, 460 VAC, 5 HP WITH 3-PH INPUT

AUTOMATIONDIRECT.com