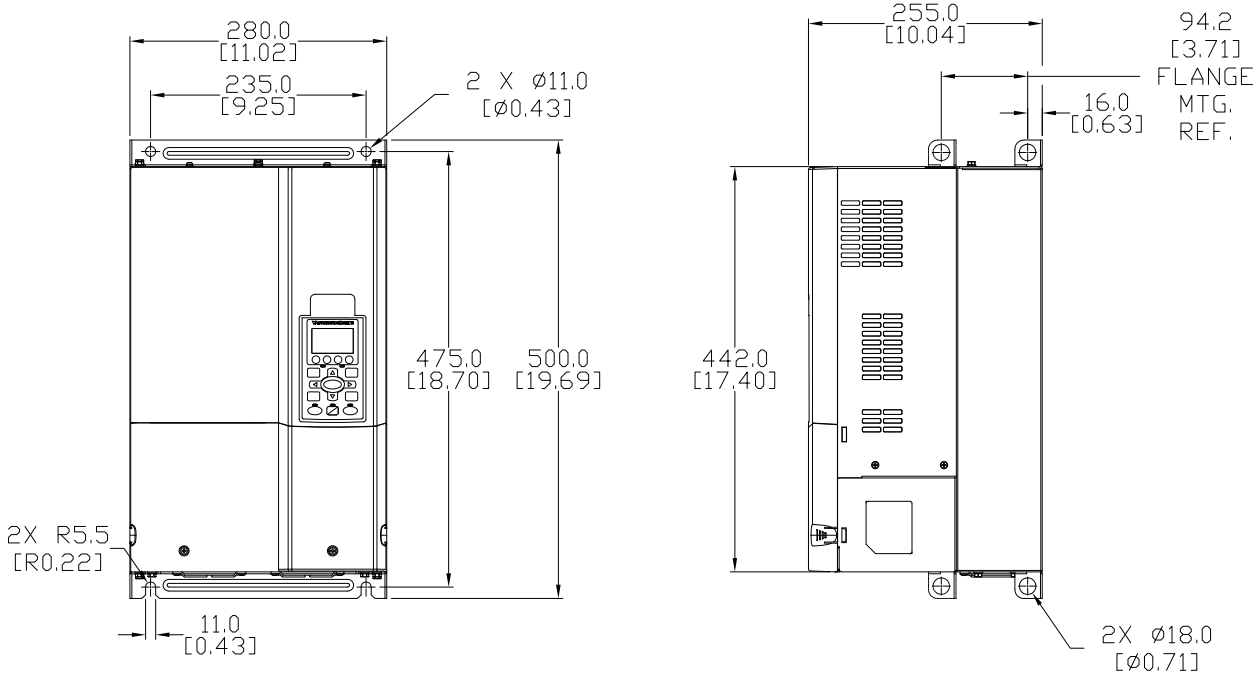

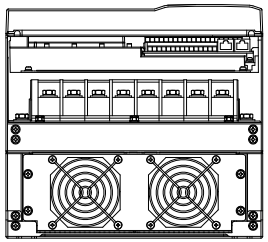

NOTES:

1. DIMENSIONS CAN BE CHANGED BY MANUFACTURER WITHOUT NOTICE.
2. DIMENSIONS DO NOT IMPLY TOLERANCE.

GS4-4060

Units: mm [inches]

Scale: Full

DURAPULSE GS4 SERIES AC
HIGH-PERFORMANCE DRIVE,
460 VAC, 60 HP WITH 3-PH INPUT,
SVC OR V/HZ MODE

AUTOMATIONDIRECT.com