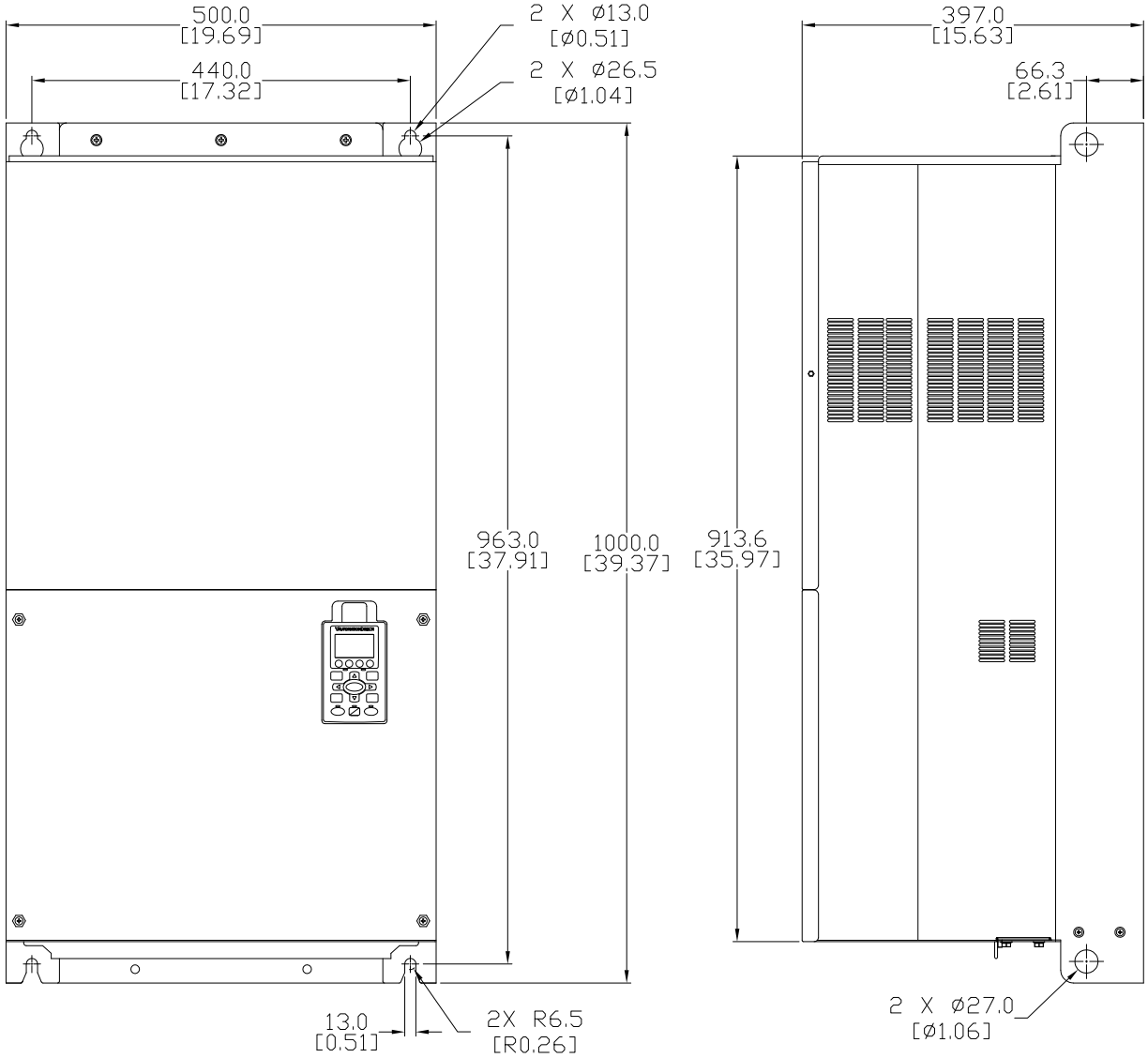

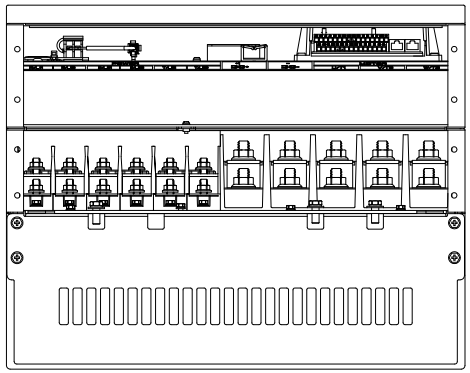

NOTES:

1. DIMENSIONS CAN BE CHANGED BY MANUFACTURER WITHOUT NOTICE.

2. DIMENSIONS DO NOT IMPLY TOLERANCE.

GS4–4300

Units: mm [inches]

Scale: Full

DURAPULSE GS4 SERIES AC HIGH-PERFORMANCE DRIVE, 460 VAC, 300 HP WITH 3-PH INPUT, SVC OR V/HZ MODE

AUTOMATIONDIRECT.com