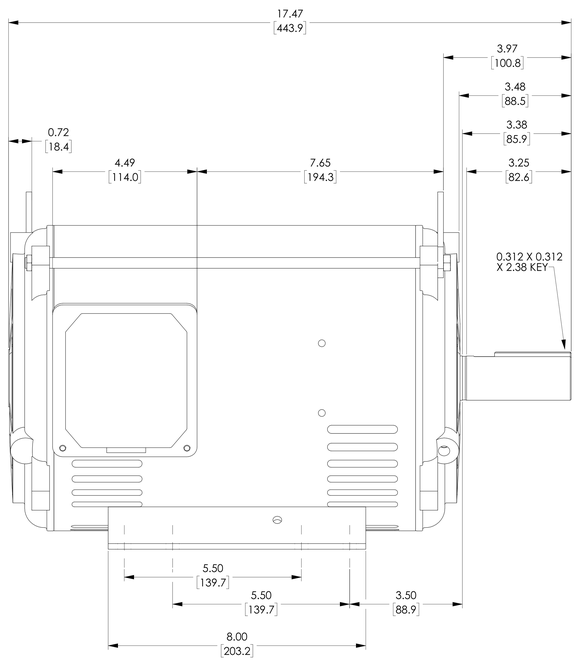

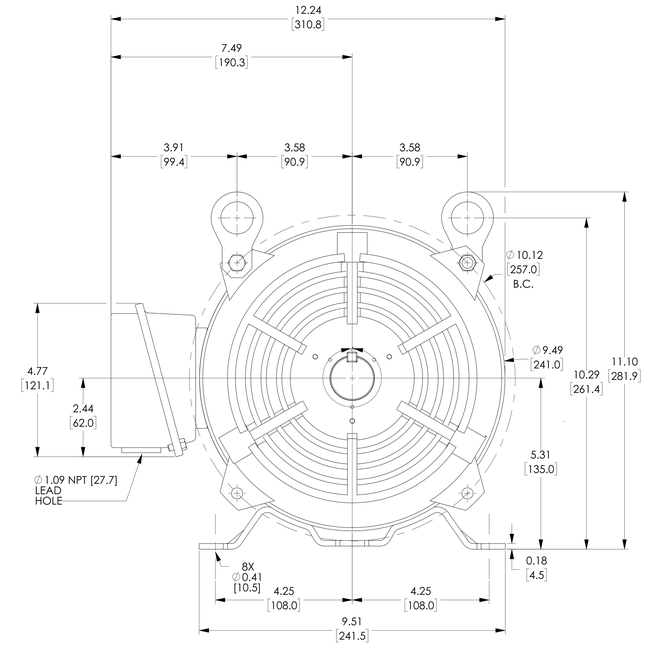

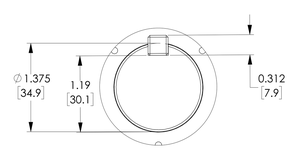

DETAIL A
SCALE 2 : 1

NOTES:

1. DIMENSIONS CAN BE CHANGED BY MANUFACTURER WITHOUT NOTICE.
2. DIMENSIONS DO NOT IMPLY TOLERANCE.

GT0016A

Units: inches [mm]
Scale: Full

MARATHON GLOBETROTTER SERIES PREMIUM EFFICIENCY AC INDUCTION MOTOR, GENERAL PURPOSE & INVERTER RATED, 7.5HP, 3-PH, 208-230/460 VAC, 1800 RPM, ODP, 213T FRAME

AUTOMATIONDIRECT.com