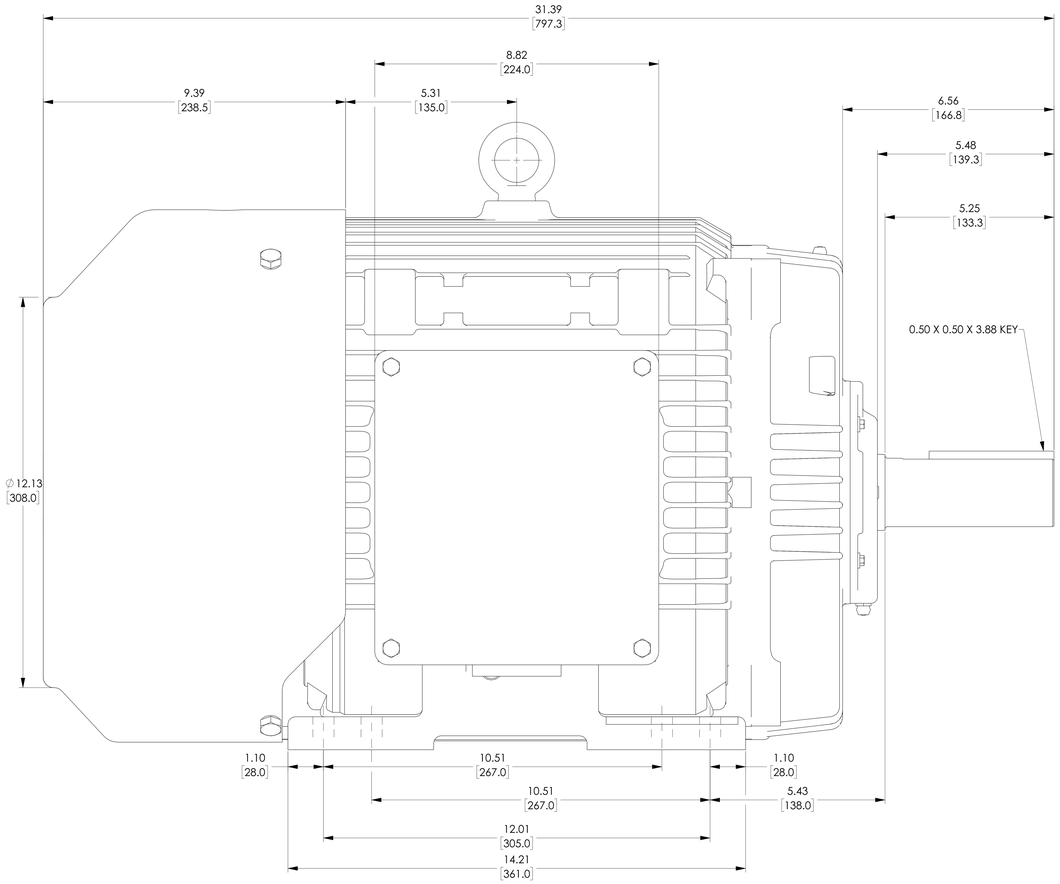

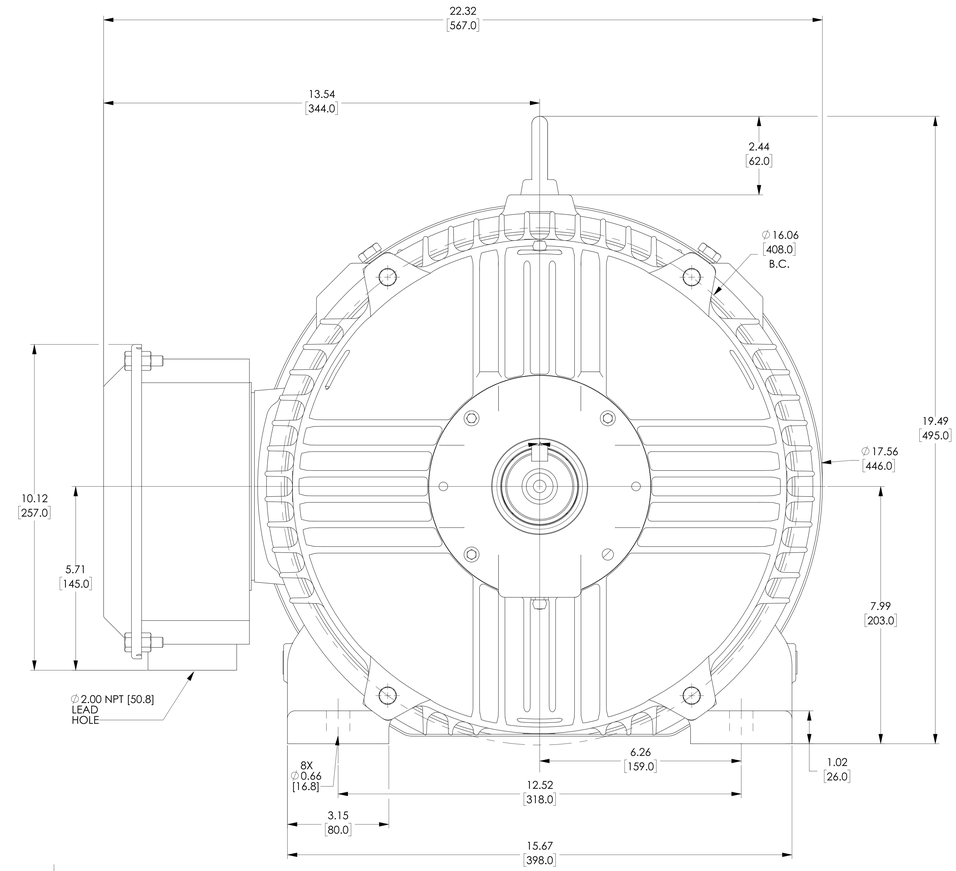

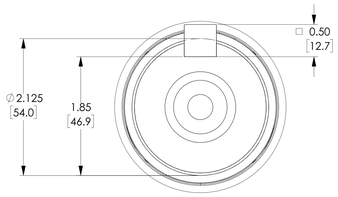

DETAIL A
SCALE 2 : 1

NOTES:

1. DIMENSIONS CAN BE CHANGED BY MANUFACTURER WITHOUT NOTICE.
2. DIMENSIONS DO NOT IMPLY TOLERANCE.

GT1037A

Units: inches [mm]
Scale: Full

MARATHON GLOBETROTTER SERIES PREMIUM EFFICIENCY AC INDUCTION MOTOR, GENERAL PURPOSE, INVERTER RATED & HAZARDOUS LOCATION, 50HP, 3-PH, 230/460 VAC, 1800 RPM, TEFC, 326T FRAME

AUTOMATIONDIRECT.com