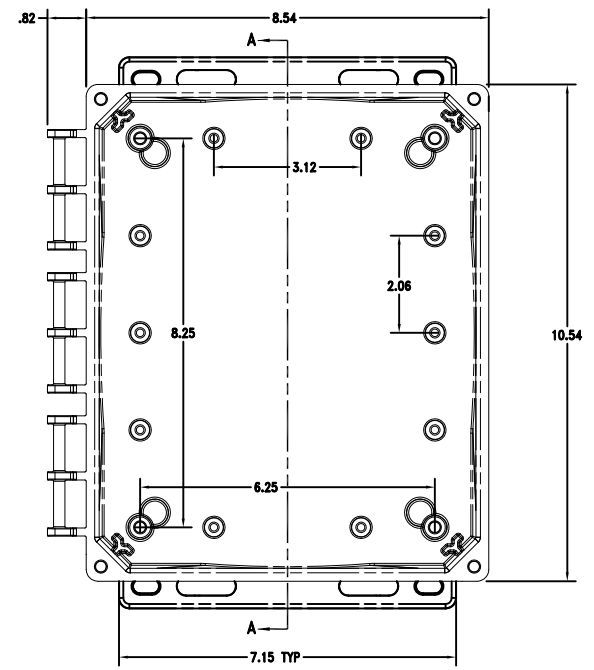

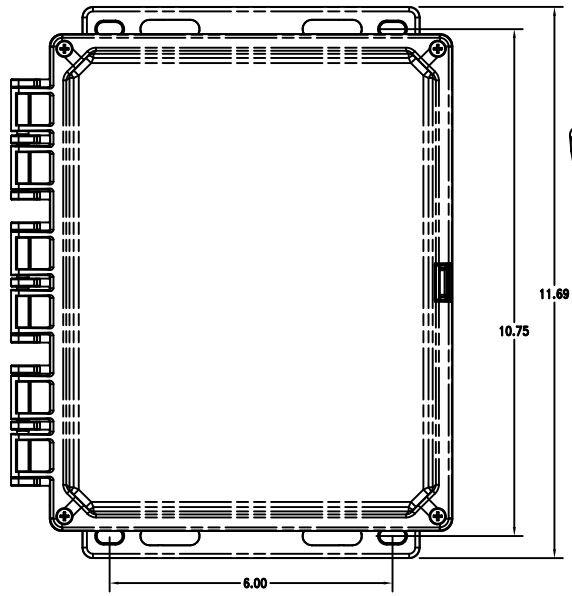

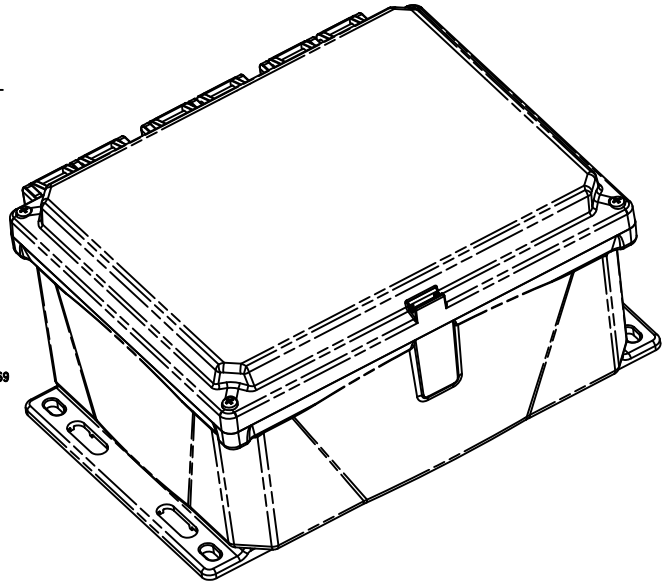

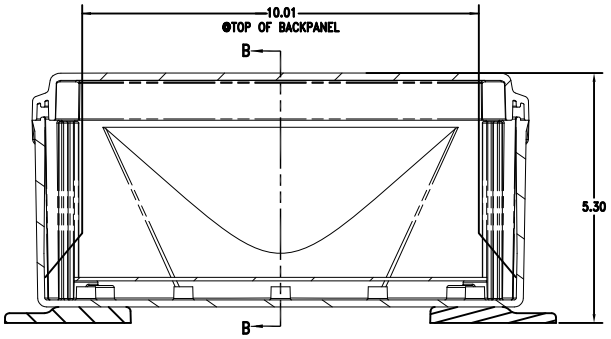

SECTION A–A

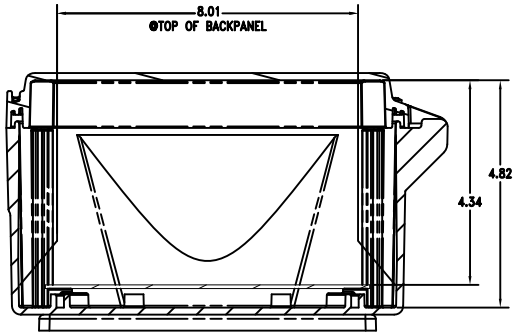

SECTION B–B

REV	DESCRIPTION	BY	DATE	CHK	APPROVED
A	RELEASED TO PRODUCTION AT REV A	W.T.	01-06-17		

DEFAULT TOLERANCES
DECIMAL .XX ±0.03 .XXX ±0.010
FRACTIONAL ± 1/64
ANGULAR ±1°

INTEGRA ENCLOSURES

SCALE FULL	SHEET 1 of 1	DRAWN BY W. TIDWELL
TITLE 10X8X4 HINGED BOX ASSEMBLY FLANGE, 6P		
DATE 01.06.17	DRAWING NUMBER H10084HF-6P	REV A