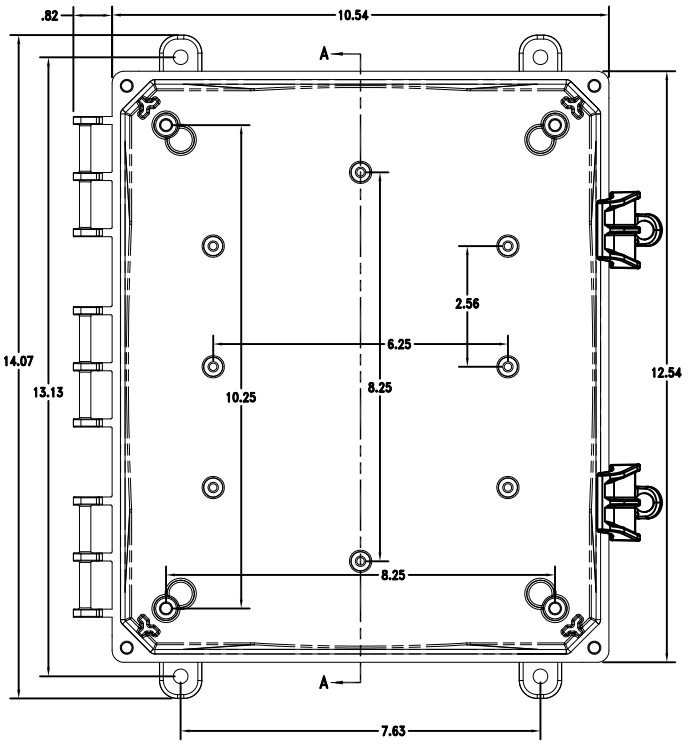

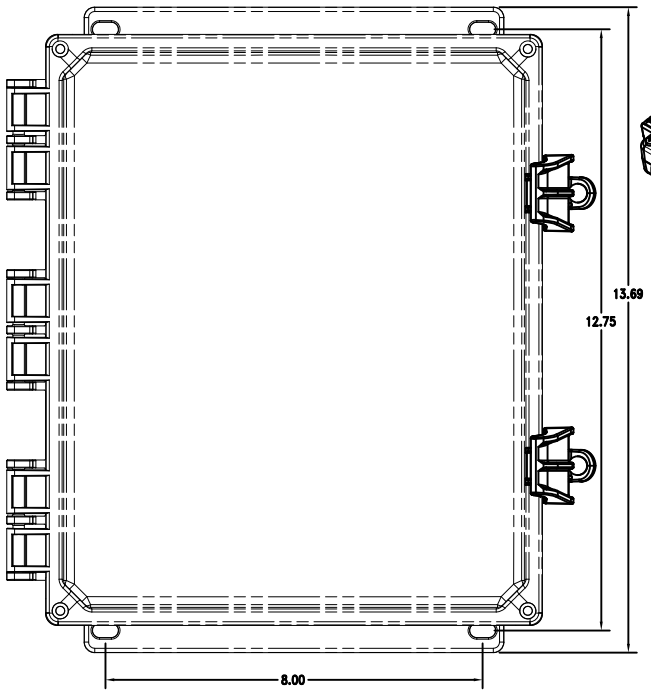

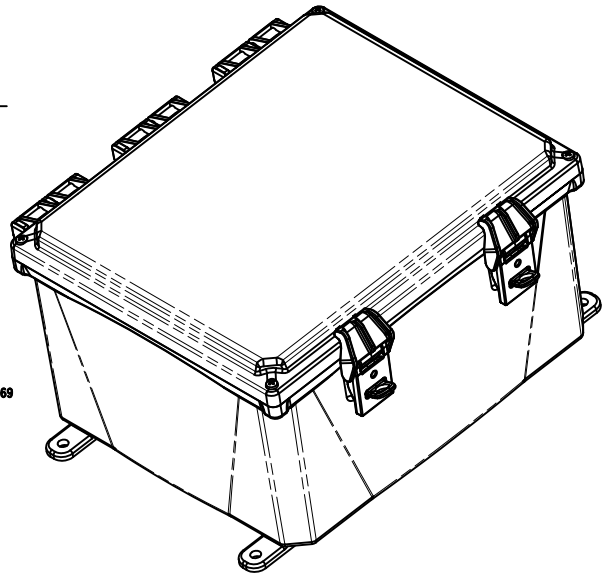

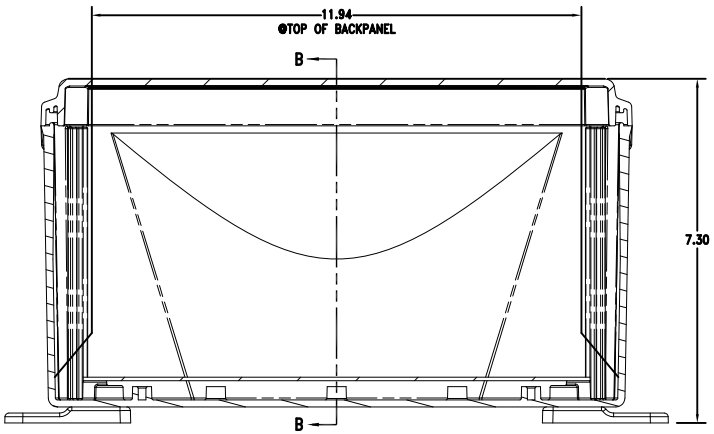

SECTION A–A

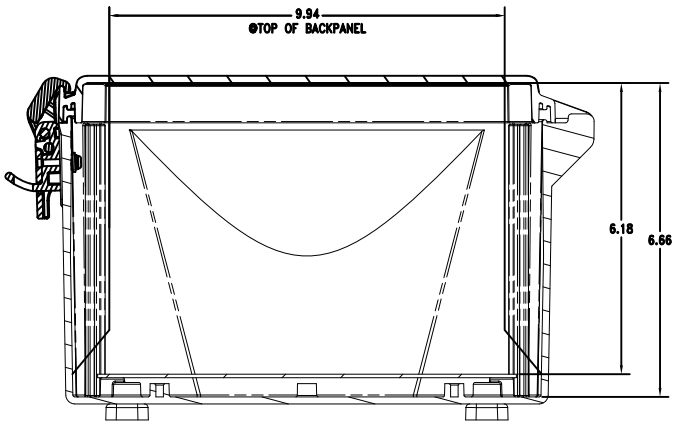

SECTION B–B

REV	DESCRIPTION	BY	DATE	CKD	APPROVED
A	RELEASED TO PRODUCTION AT REV A	TLS	12-22-16		

DEFAULT TOLERANCES
DECIMAL .XX ±0.03 .XXX ±0.010
FRACTIONAL ± 1/64
ANGULAR ±1°

INTEGRA ENCLOSURES

SCALE FULL	SHEET 1 of 1	DRAWN BY T.STOKES
TITLE 12X10X6 HINGED BOX ASSY NON–METALLIC LOCKING LATCH		
DATE 12.22.16	DRAWING NUMBER H12106HFNL	REV A