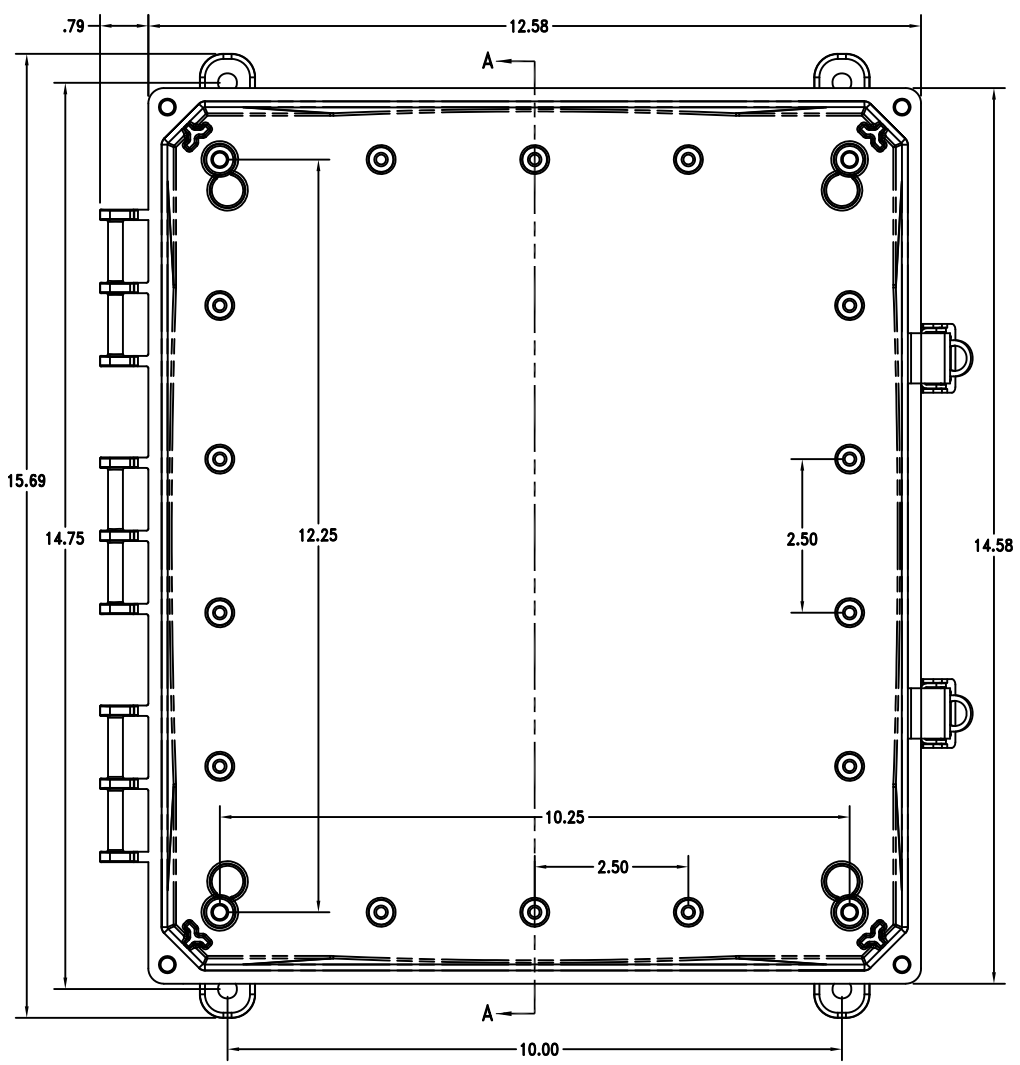

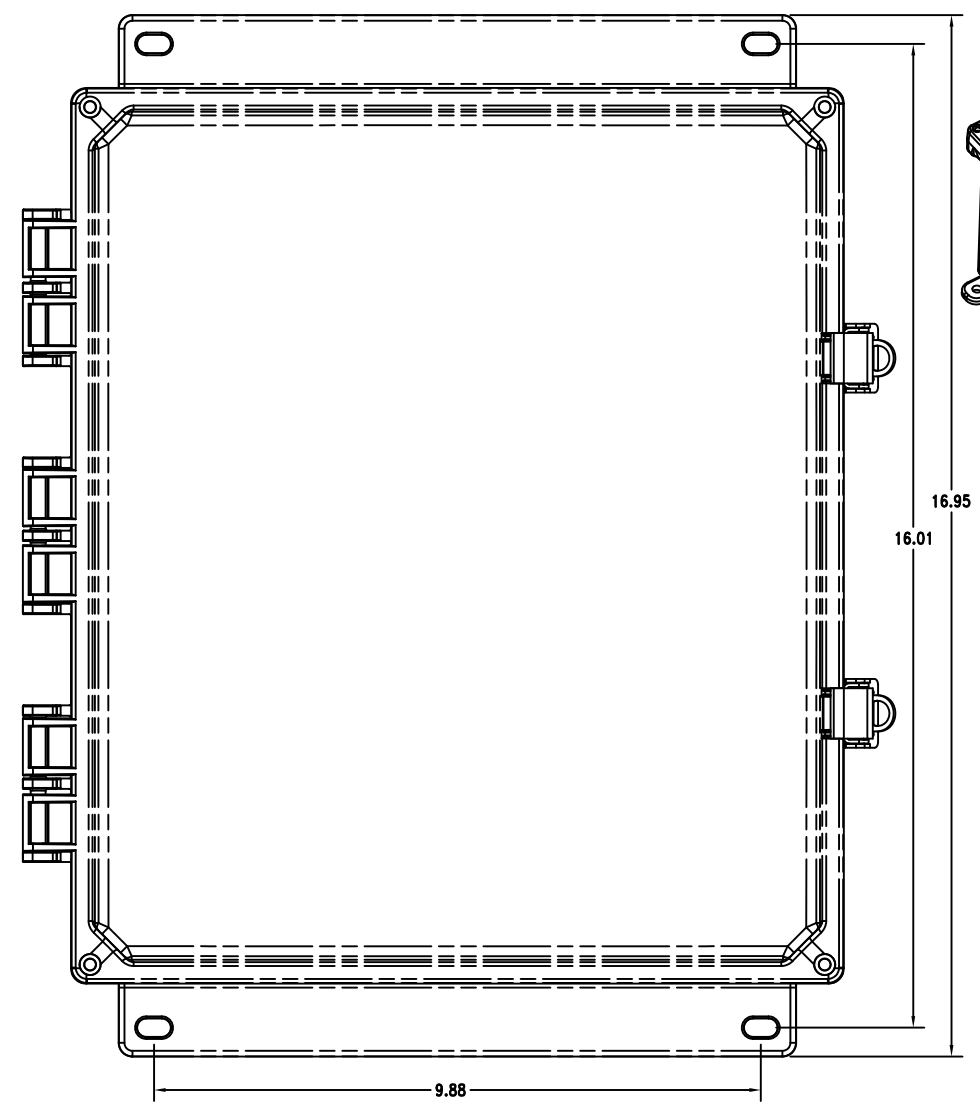

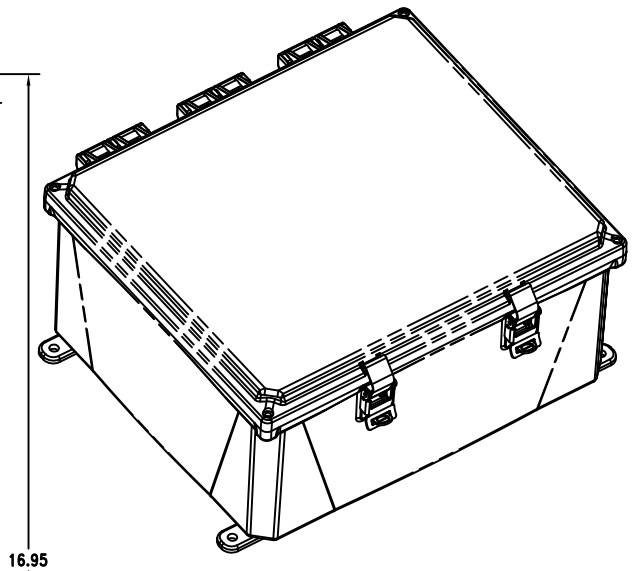

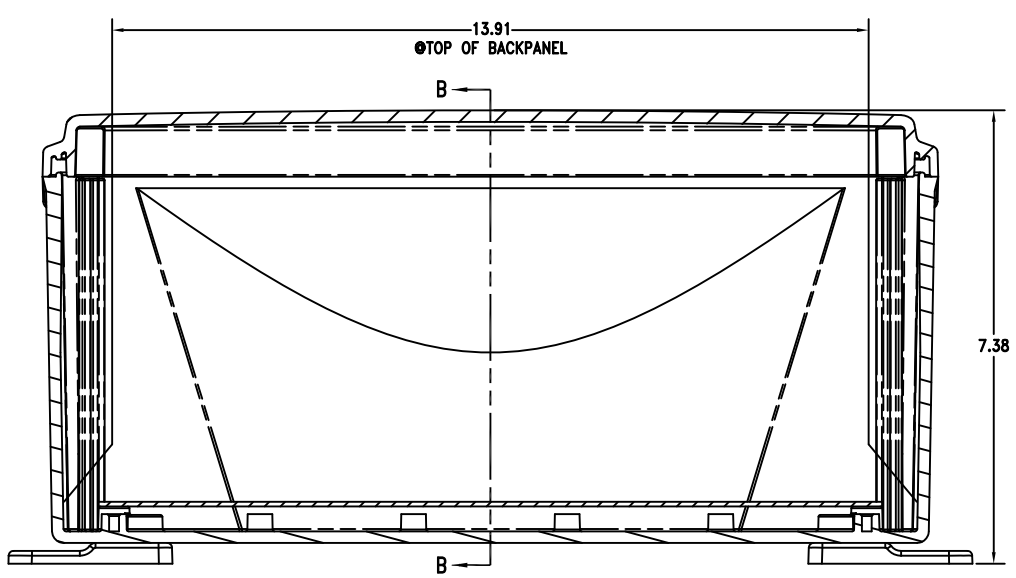

SECTION A–A

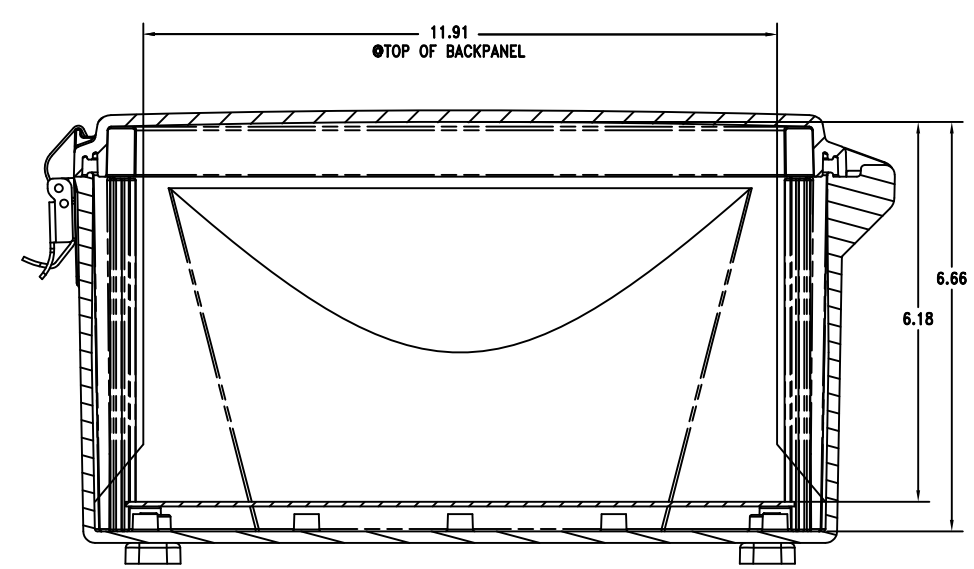

SECTION B–B

REV	DESCRIPTION	BY	DATE	CHK	APPROVED
A	RELEASED TO PRODUCTION AT REV A	W.T.	12-2-13		

DEFAULT TOLERANCES
DECIMAL .XX ±0.03 .XXX ±0.010
FRACTIONAL ± 1/64
ANGULAR ±1°

INTEGRA ENCLOSURES

SCALE: FULL
SHEET: 1 of 1
DRAWN BY: W.TIDWELL
TITLE: 14X12X6 HINGED BOX ASSEMBLY
DATE: 12.02.13
DRAWING NUMBER: 14X12X6
REV: A