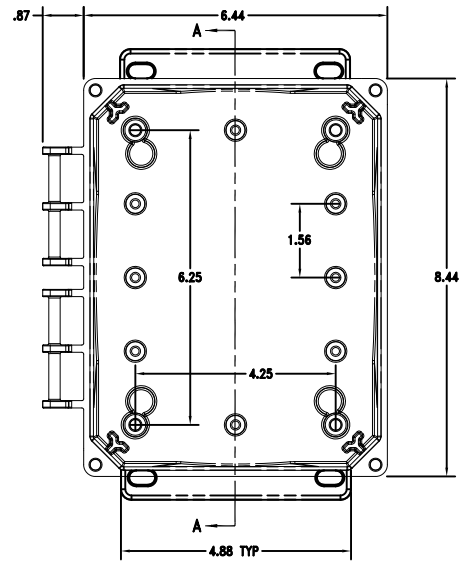

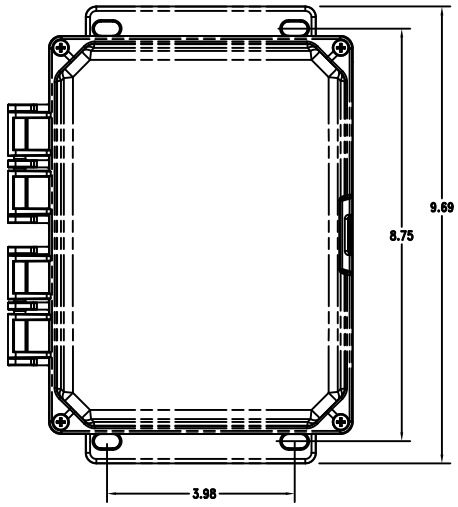

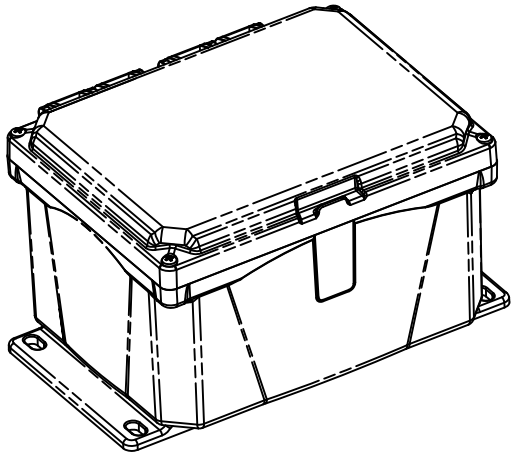

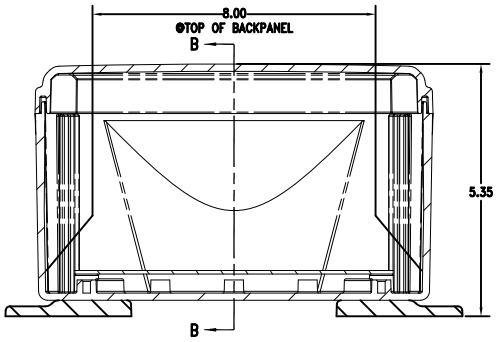

SECTION A–A

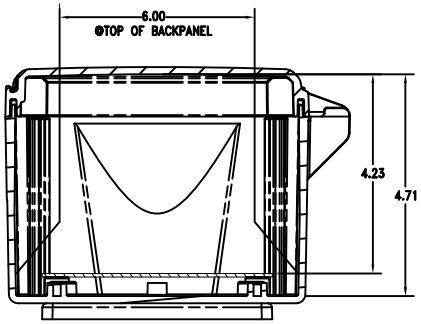

SECTION B–B

REV	DESCRIPTION	BY	DATE	CHK	APPROVED
A	RELEASED TO PRODUCTION AT REV A	W.T.	01-06-17		

DEFAULT TOLERANCES
DECIMAL .XX ±0.03 .XXX ±0.010
FRACTIONAL ± 1/64
ANGULAR ±1°

INTEGRA ENCLOSURES

SCALE: FULL | SHEET: 1 of 1 | DRAWN BY: W. TIDWELL

TITLE: 8X6X4 HINGED BOX ASSEMBLY, FLANGE, 6P

DATE: 01.06.17 | DRAWING NUMBER: H8064HF–6P | REV: A