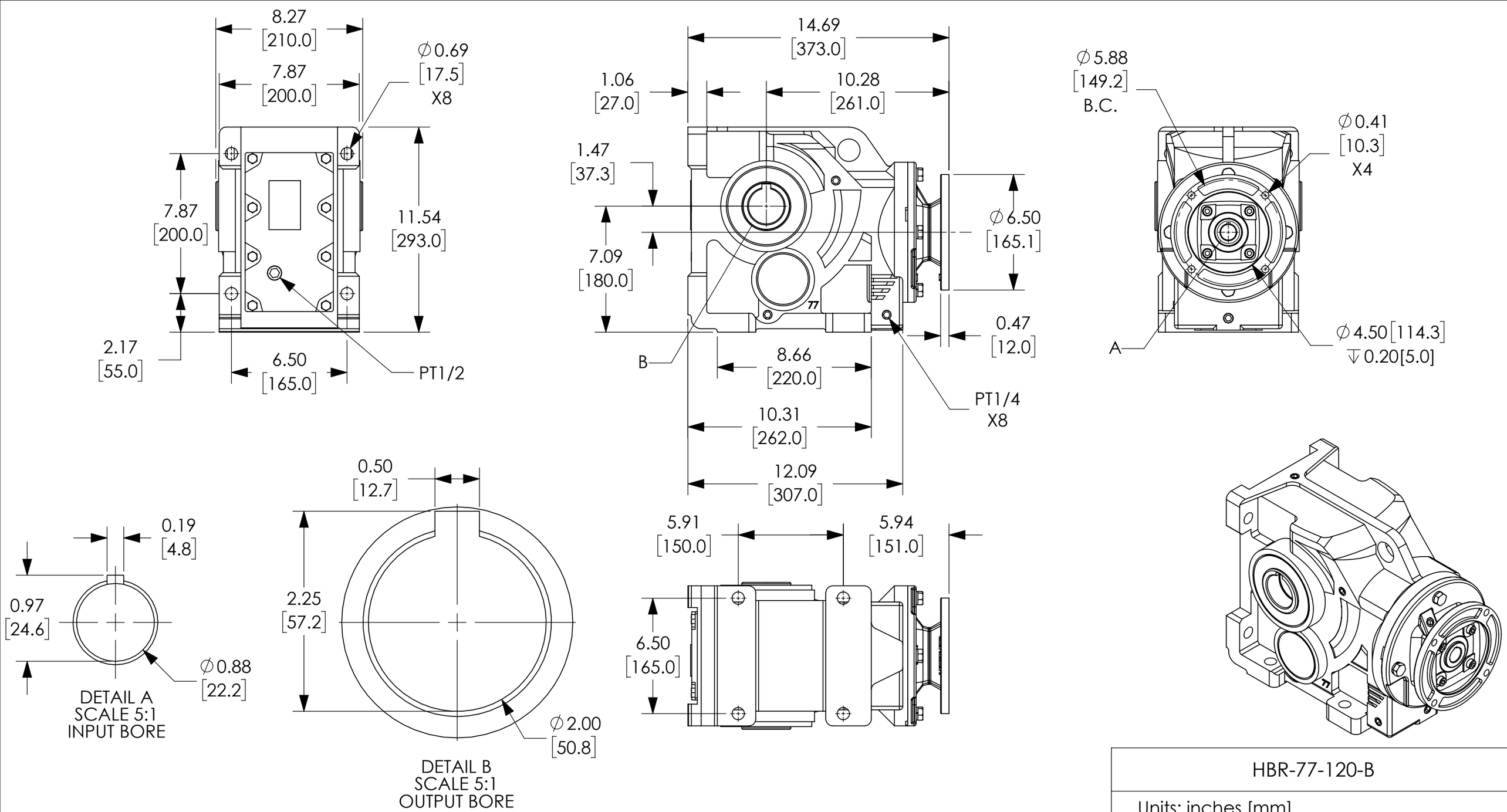

HBR-77-120-B

Units: inches [mm]
Scale: Full

HELICAL BEVEL GEARBOX: 145TC FLANGE, 120:1

AUTOMATIONDIRECT.com

NOTES:

1. DIMENSIONS CAN BE CHANGED BY MANUFACTURER WITHOUT NOTICE.
2. DIMENSIONS DO NOT IMPLY TOLERANCE.