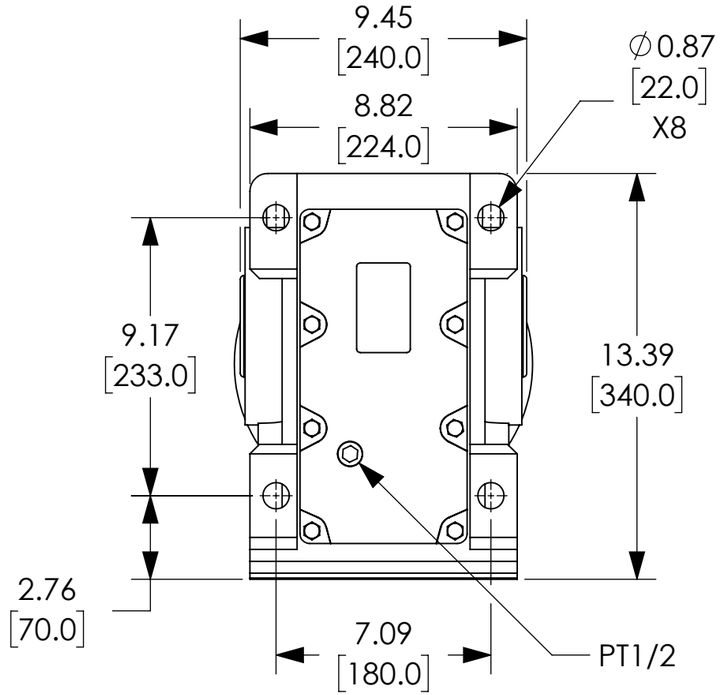

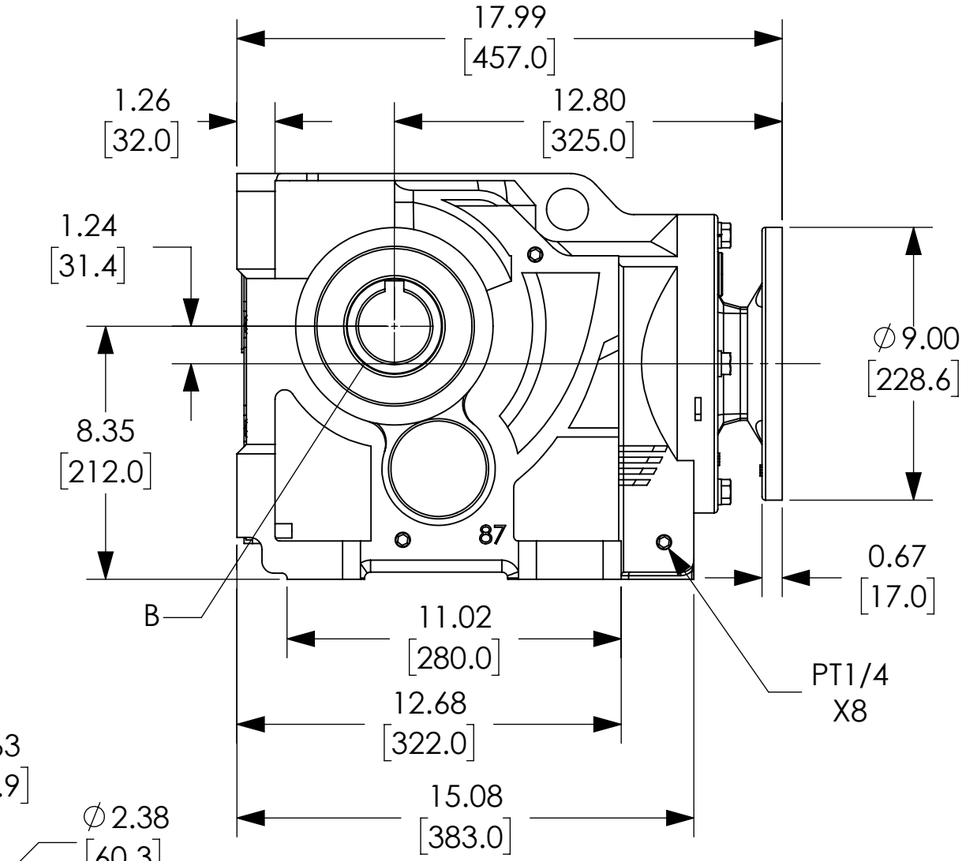

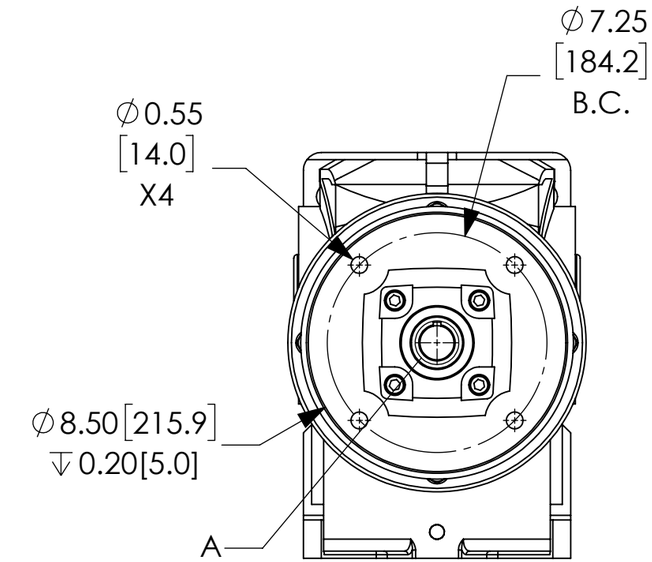

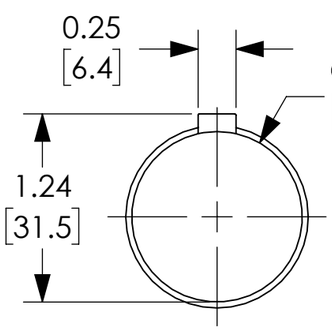

DETAIL A
SCALE 5:1
INPUT BORE

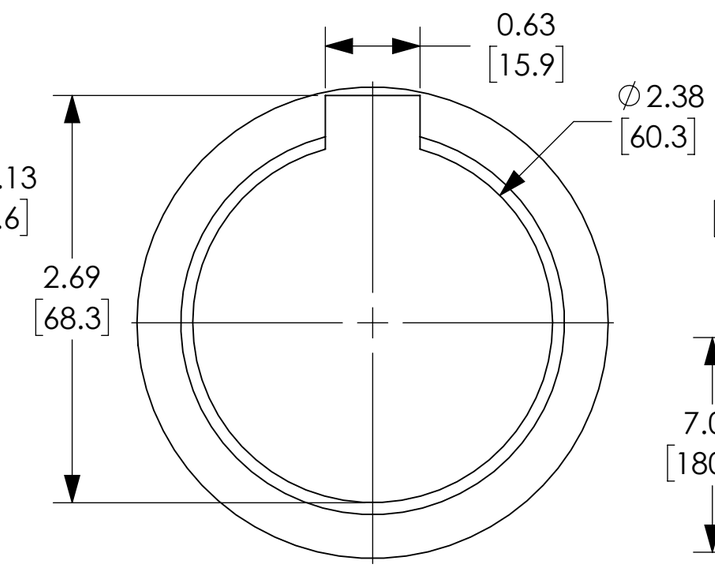

DETAIL B
SCALE 5:1
OUTPUT BORE

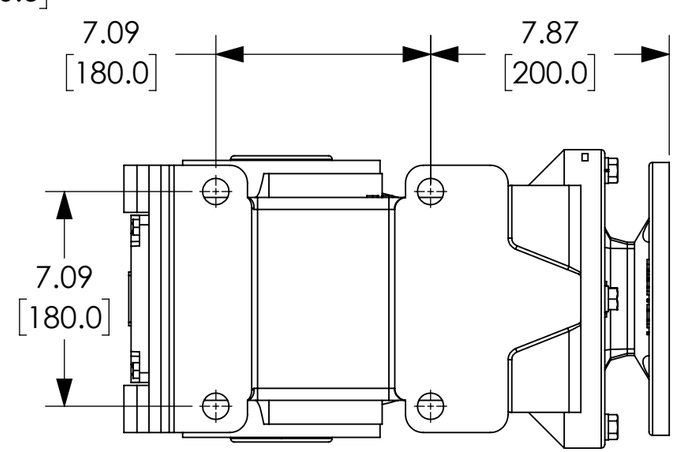

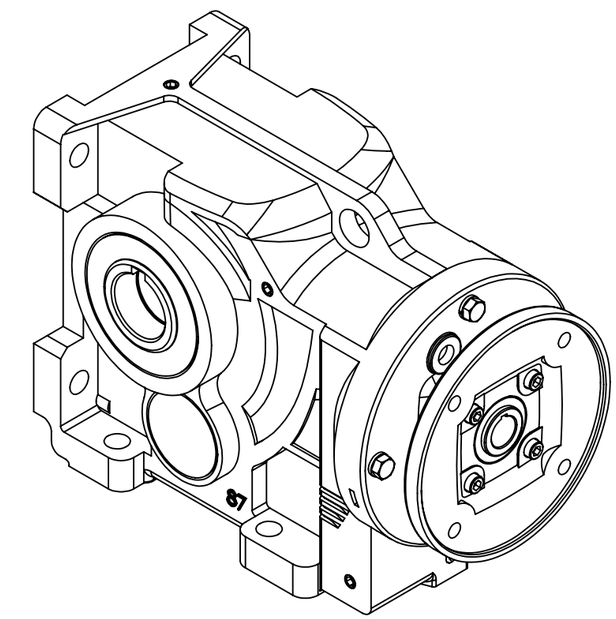

NOTES:

1. DIMENSIONS CAN BE CHANGED BY MANUFACTURER WITHOUT NOTICE.
2. DIMENSIONS DO NOT IMPLY TOLERANCE.

HBR-87-120-C

Units: inches [mm]
Scale: Full

HELICAL BEVEL GEARBOX: 182/4TC FLANGE, 120:1

AUTOMATIONDIRECT.com