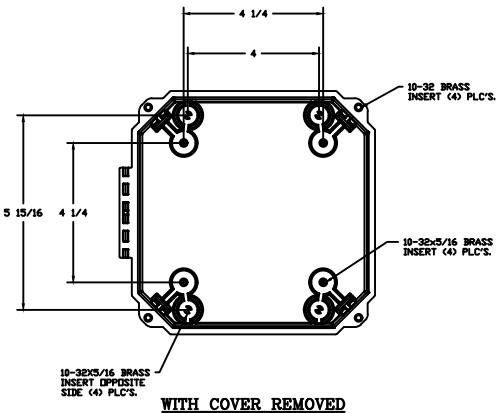

WITH COVER REMOVED

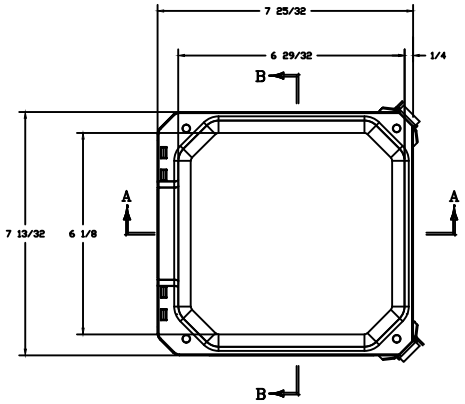

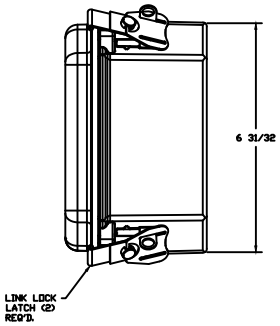

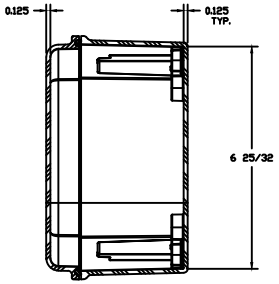

SECTION B-B

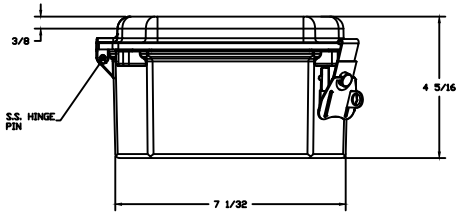

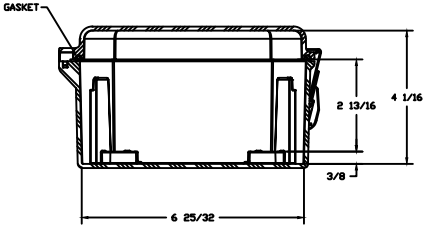

SECTION A-A

NOTES:

COLOR: GLACIER GRAY RR1013

NEMA 1, 3, 3S, 4X, 12, 13 IP66

MATERIAL: F.R. POLYESTER FIBERGLASS

LET.	REVISION RECORD	DATE	BY	CHD.

DR. BY	ZJB
DATE	10/21/02
CHK. BY	
DATE	
APD. BY	
DATE	
SCALE	DO NOT SCALE

TOLERANCES UNLESS SPECIFIED	DECIMAL	FRACTIONAL
	± .010	± 1/32

HUBBELL WIEGMANN

CUSTOMER

AutoCAD DWG. FILE: HW-CC60604CHTL

PART NAME: ENCLOSURE

PART NO.: HW-CC60604CHTL