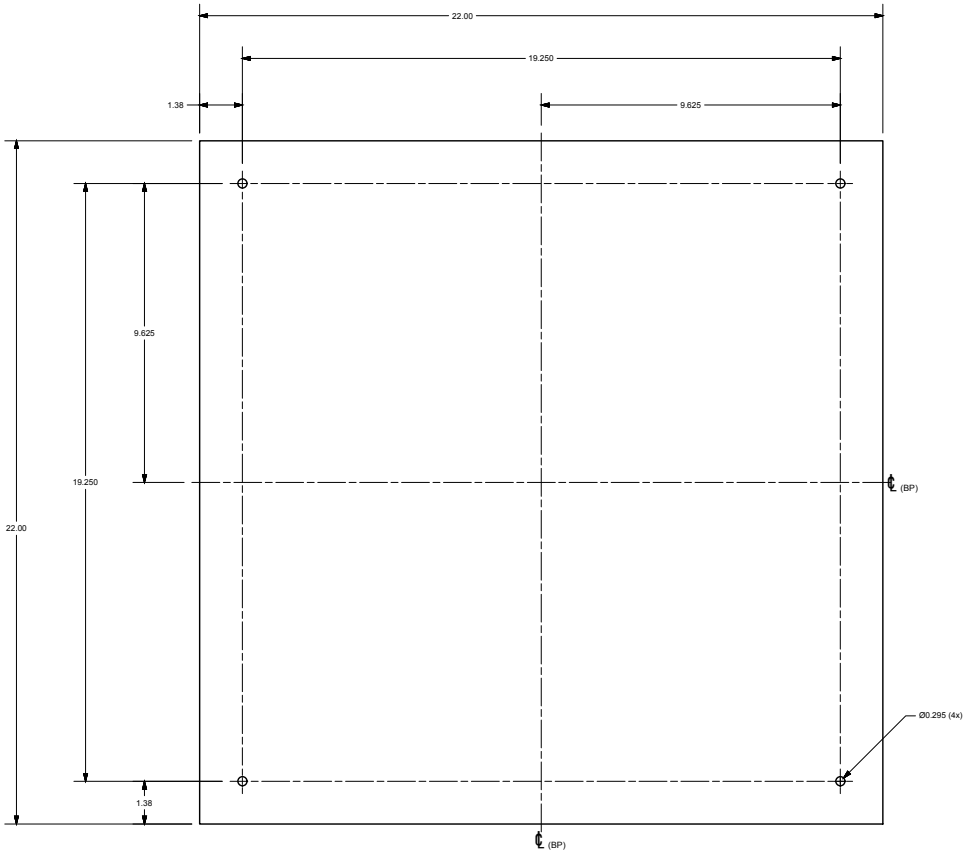

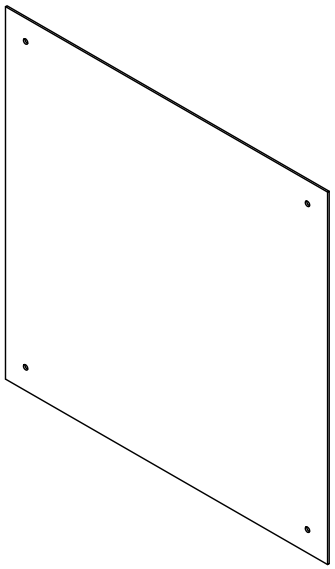

NOTES:
1. PANEL SHALL BE FREE FROM BURRS & SHARP EDGES
2. PANEL SHALL BE FLAT
3. PANEL SHALL BE POWDER COATED USING
   TIGER DRYLAC RAL 9003 49-11400 - SIGNAL WHITE OR
   STAHLIN ENGINEERING APPROVED EQUIVALENT
4. MISALIGNED EDGES EXCEEDING 0.005" (STEPS) SHALL NOT BE PERMITTED
5. PAINT FINISH SHALL COMPLY WITH QAF-810-01-03
6. ALL EDGES SHALL BE SQUARE AND PARALLEL
7. ALL SURFACES SHALL BE CLASSIFIED AS "CLASS A"
   EXCEPT INTERNAL SURFACES OF ALL HOLES
8. ALL "2424" SIZE PANELS AND BELOW SHALL BE PACKAGED IN AN ENVELOPE WITH NO METAL (CLASP)
9. ALL "3020" SIZE PANELS AND ABOVE SHALL BE PACKAGED IN CARDBOARD WITH NO METAL (STAPLES)

SPECIAL REQUIREMENTS

NEMA 250: TYPE N/A
IEC 60529: N/A
COLOR: GLACIER GRAY (WPR3013)
COLOR STANDARD: PANTONE 428 C

STANDARD P/N: HW-MP2424CS
CUSTOMER DWG:

ALL DIMENSIONS ARE IN INCHES UNLESS OTHERWISE SPECIFIED

TOLERANCES UNLESS SPECIFIED	.XX	.XXX
	± 0.03	± 0.010

MATERIAL: FIBERGLASS REINFORCED POLYESTER (FRP)

REVISION HISTORY

REV	DESCRIPTION	DATE	ENG
-	-	-	-
-	-	-	-
-	-	-	-
-	-	-	-
-	-	-	-
-	-	-	-

HUBBELL-WIEGMANN

DRAWN BY	DATE	CUSTOMER	DWG
E91	08/26/16		HW-MP2424CS
SCALE		DESCRIPTION	PART NUMBER
DO NOT SCALE		J2424 BACK PANEL CARBON STEEL	HW-MP2424CS